Welcome To Today's Presentation

SEAL AFTERMARKET™
PRODUCTS
your source for engineered solutions

Phone 954-364-2400 • Toll Free 800-582-2760 • Fax 954-364-2401
www.sealaftermarketproducts.com

TOLEDO TRANS-KIT

Sponsored By:

Any Questions Or Comments Please Send Emails To webinars@atra.com

Any Questions That You May Have During The Webinar Please Feel Free To Text Them In At Any Time

Download the *NEW* ATRA EXPO App

Schedule your weekend before you get there using the schedule and agenda tiles.

- ✓ Stay up-to-date with the event activities
- ✓ Find exhibitors easily with the Exhibitor Map
- ✓ Full list of all seminars and activities
- ✓ Network with other attendees
- ✓ Read about the speakers
- ✓ Send Messages

Available on the App Store

Google play

●●●○○ Verizon 1:37 PM

Close **Web Site**

Profile

Sign up | Install app

ATRA Headquarters
@ATRAHQ

395	6	300
TWEETS	FOLLOWING	FOLLOWERS

Follow ATRA Headquarters

ATRA Headquarters @ATRAHQ 4d
2014 ATRA Powertrain Expo - Register Now for the Lowest Prices!

●●●○○ Verizon 1:36 PM

ATRA AUTOMATIC TRANSMISSION REBUILDERS ASSOCIATION — Powertrain eXpo 2014

back | Agenda | Alerts | Settings | Home

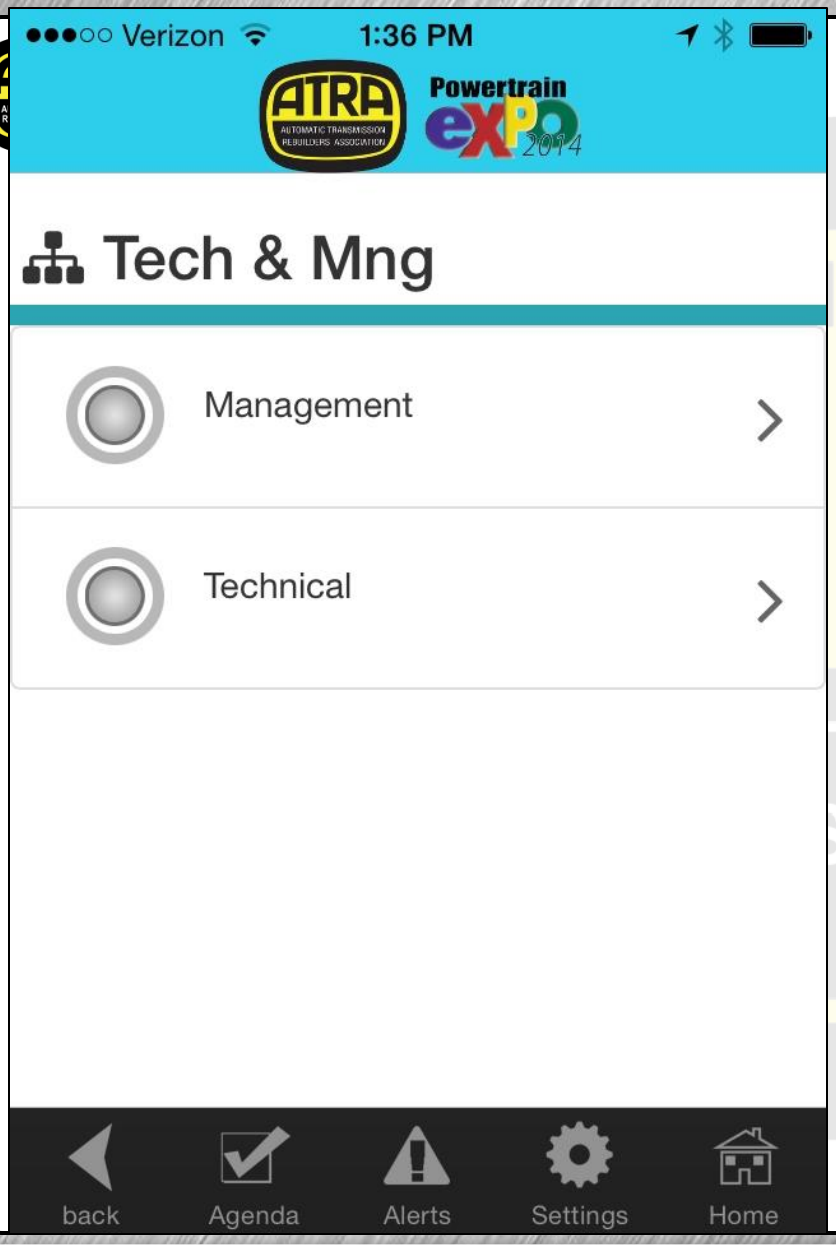

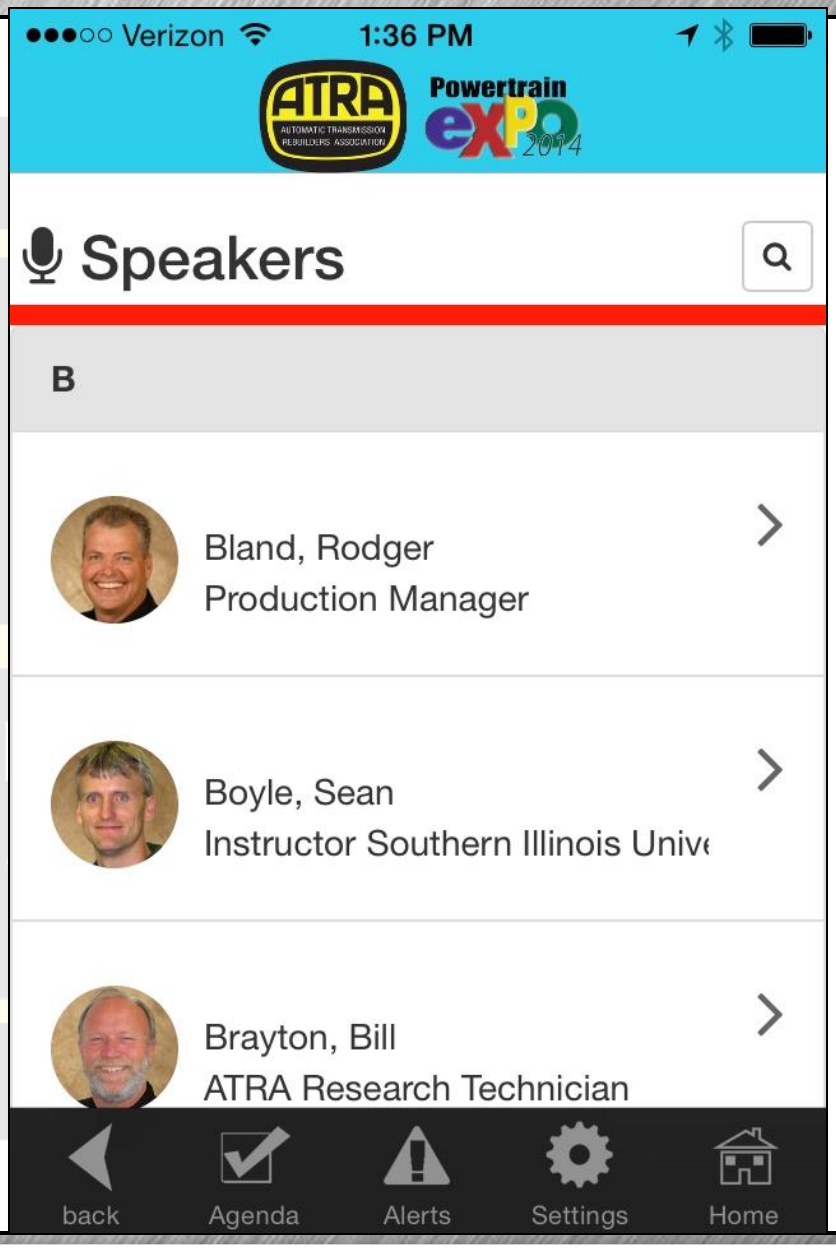

Free Roundtrip Limo Ride

ATRA is giving away a free roundtrip limo transfer to and from McCarran Airport!

To enter:
you must **download** ATRA's new Powertrain Expo App onto your smartphone
Send ATRA a **screenshot** of the app on your smartphone to powertrainexpo@atra.com
(Download available through Google Play and iTunes)

DEADLINE: OCTOBER 17
WINNER ANNOUNCED: OCTOBER 20

If you see material that is not shown in your handout just double click on the camera icon at the top right of your screen and it will leave a picture (jpg. file) on your desktop.

62TE Clutch Volume Index

This information can be found on the ATRA website to members in the repair center by typing in 62TE CVI in the search box. If you're a non member take a moment and write these specifications down.

62TE Clutch Volumes	(Preliminary)
UD	26-74
2/4	16-54
OD	42-143
L/R	16-63
LC	16-25
DC	26-34

When you received the email invitation to the webinar, there should be a place to click and download the Adobe (pdf file) of the presentation handout material.

Also there is an icon that you can click on to be placed onto the email list for future webinars. An invitation will be emailed automatically when future webinars are scheduled.

You can also invite a friend.

ATRA Presents the Chrysler/Mercedes 722.6 Webinar

Greetings!
Today's vehicles present many challenges for the technicians that are required to repair them. Mike Souza will present this webinar Sponsored by Seal Aftermarket Products. This class is approximately 35mins

Sponsored by

Register for your time zone here.

Seal Aftermarket Products

Simply click on the time zone below to register for the webinar. AEST is Australian Eastern Time zone.

Click HERE for the presentation handout

Eastern Time Zone 12:00PM September 2, 2014

Mountain Time Zone 12:00PM September 2, 2014

Eastern Australia Time Zone 7:00AM September 3, 2014

Central Time Zone 12:00PM September 3, 2014

Pacific Time Zone 12:00PM September 3, 2014

If you have any questions or problems logging in please contact Shaun Velasquez, ATRA Project Manager at webinars@atra.com or call 805 604 2021.

Join Our Mailing List

Send to a Colleague

Toyota 4X4

Presented by:
Mike Souza
ATRA Senior Research Technician

Types of Toyota 4 Wheel Drive Systems

There are two <u>basic</u> types of 4 wheel drive systems used in Toyota vehicles.

Part Time 4 Wheel Drive: Designed to be operated in 4WD mode in off-road or slippery conditions <u>ONLY</u> therefore the name Part-Time.

Full Time 4 Wheel Drive <u>(3 versions)</u>: Full-time 4WD vehicles can be operated in 4WD mode on all driving surfaces.

- **Full-Time (always on)**
- **Full-Time Multimode (switch on or off)**
- **Full-Time On-Demand**

These different types of 4 wheel drive systems vary upon vehicle model and year application.

Transfer Case Design

There are two designs of transfer cases used in Toyota models.

The first was a gear driven design used in pickups and 4Runners until 1995.

The Land Cruiser used an exclusive gear type in some later models.

The power flows from the input shaft through the gears and transfers torque to both the front and rear drive shaft.

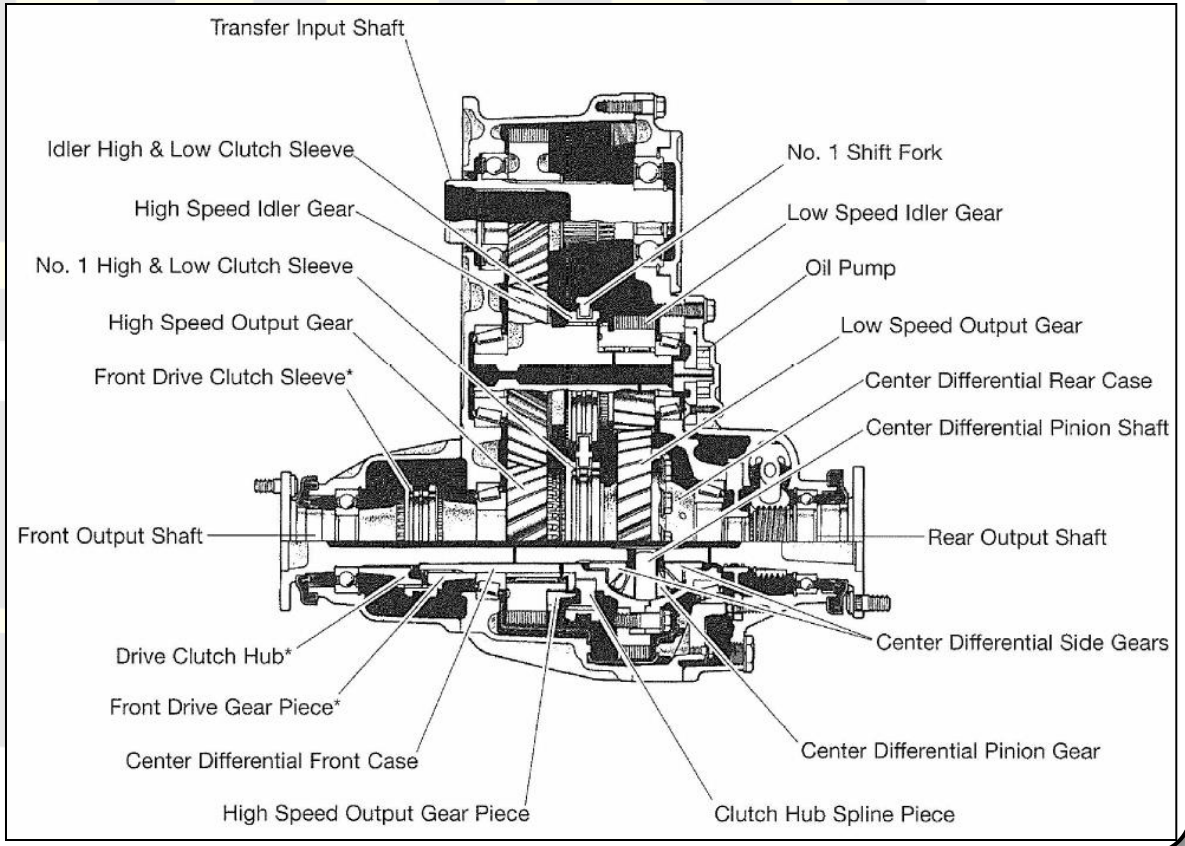

Gear Driven Design Transfer Case

The center differential can be driven by a high or low speed idler gear.

The idler gears are coupled to the center differential by the No. 1 high/low clutch sleeve.

The front drive clutch sleeve locks the center differential to the front output shaft.

An oil pump that is driven by the idler gear lubricates the transfer case.

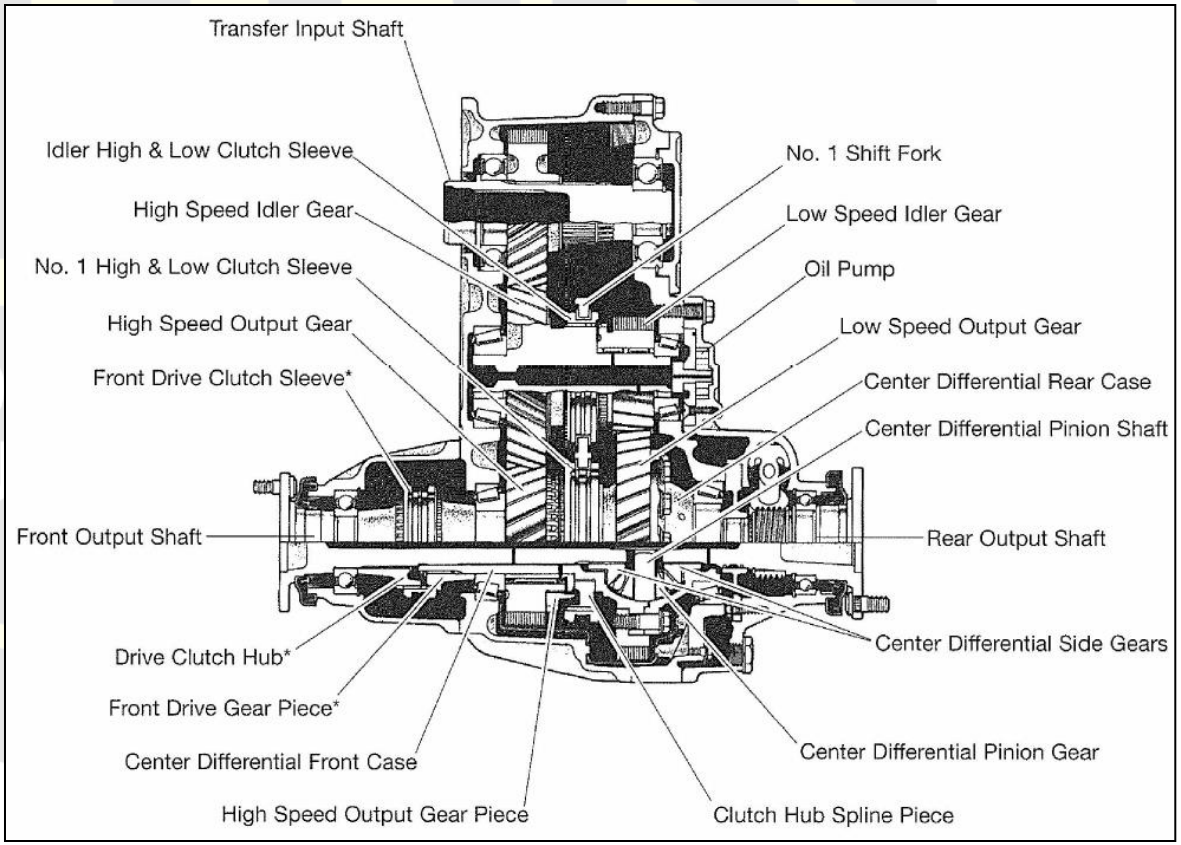

Gear Driven Design Transfer Case

Changing from high to low speed is done through a floor mounted shifter <u>only</u> when the vehicles is at a stop.

During the shift to high speed the high/low clutch sleeve on the idler assembly moves to the right at the same time as the No. 1 high/low clutch sleeve on the center differential.

When selecting low speed; the low speed idler gear is engaged with the high speed Idler and the high speed output gear is disengaged from the center differential.

The high gear ratio between the smaller low speed idler gear and larger low speed output gear provides low gear.

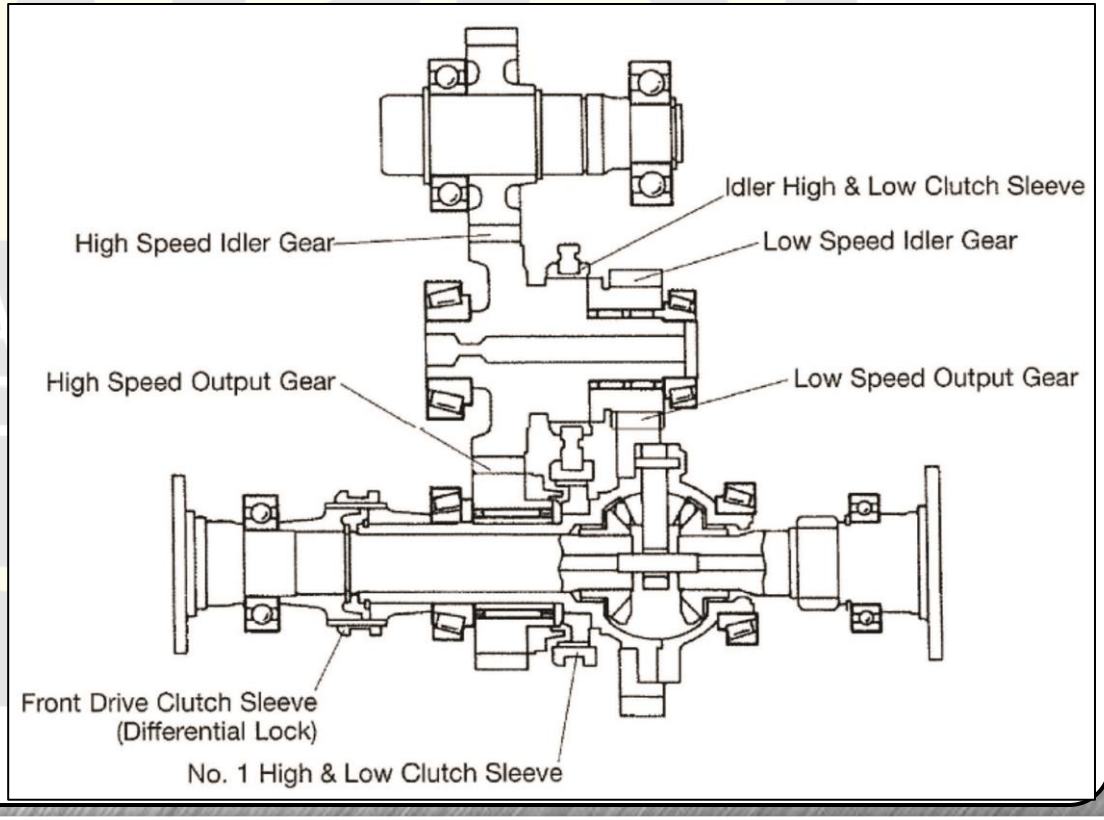

Gear Driven Design Transfer Case

When selecting high speed; the high speed idler gear disengages along with the low speed idler gear and the high speed output gear engages with the center differential case.

This places the transfer case in a high 1:1 ratio as the input drive and high speed output gear have the same amount of teeth.

As the center differential case is driven; the pinion shaft transfers the torque through the pinion gears to the side gears driving both output shafts.

This can be accomplished by an electronic shift actuator/motor.

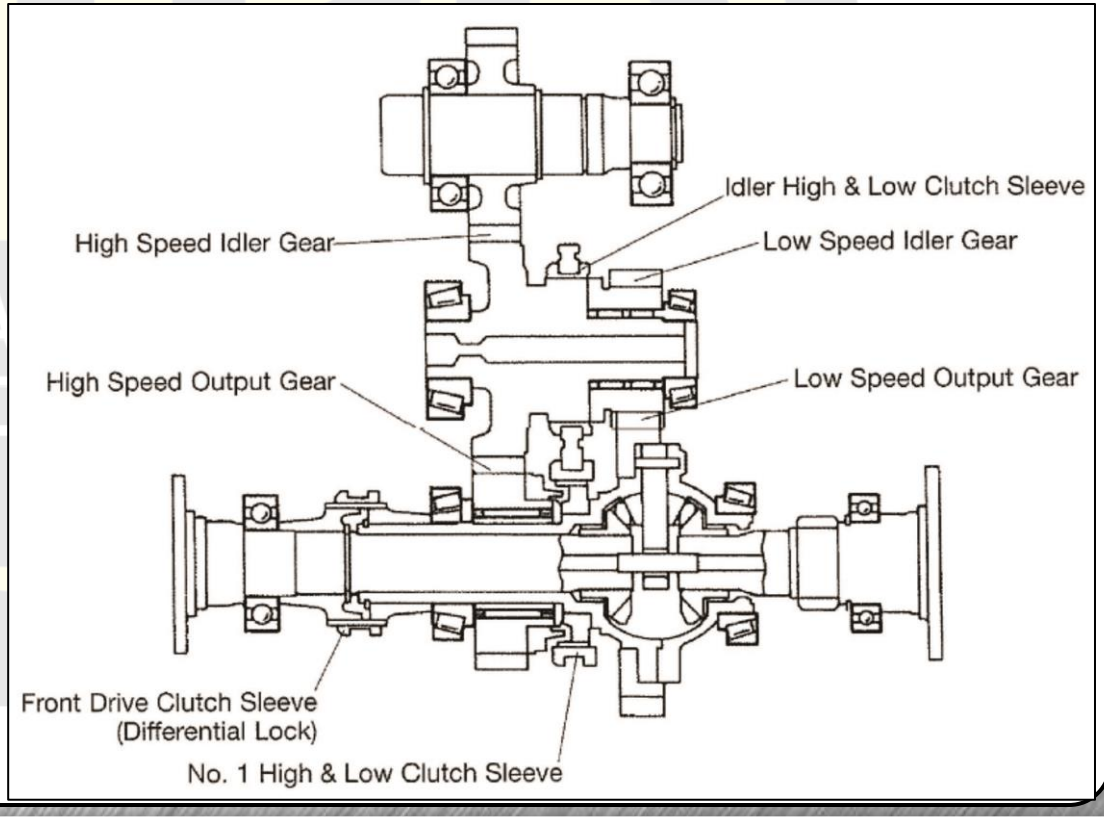

Chain Driven Design Transfer Case

The chain driven design transfer case function is similar to the gear driven design.

The chain driven type uses a planetary gear set instead of a countershaft to provide a low range reduction.

This design uses a silent chain instead of an idler gear to transfer torque to the front output shaft.

A synchronizer assembly is used to change from L4 to H4 without stopping the vehicle.

The front drive clutch sleeve connects the output shaft to the chain in 4WD. This drives the front output shaft.

This design also uses an oil pump for lubrication.

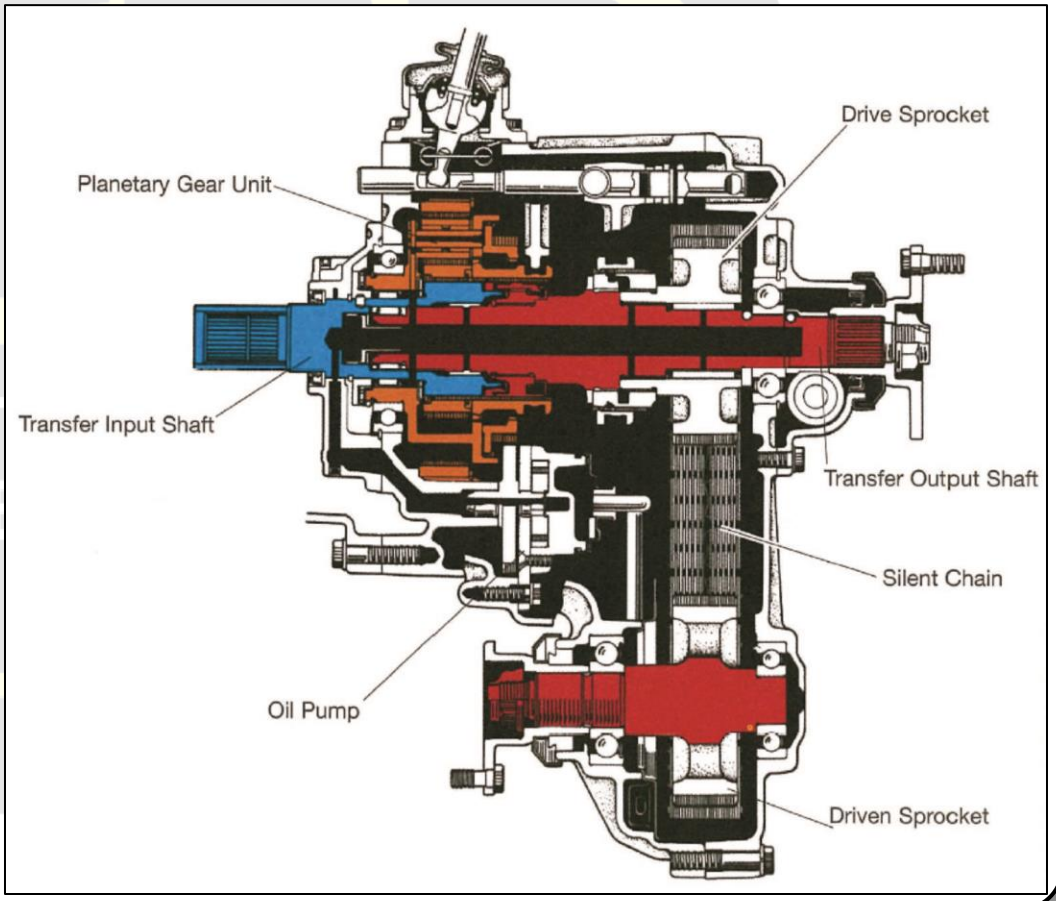

Trochoid Pump Assembly

The Trochoid pump is internal to the chain driven transfer cases.

The oil pressure is regulated by a relief valve.

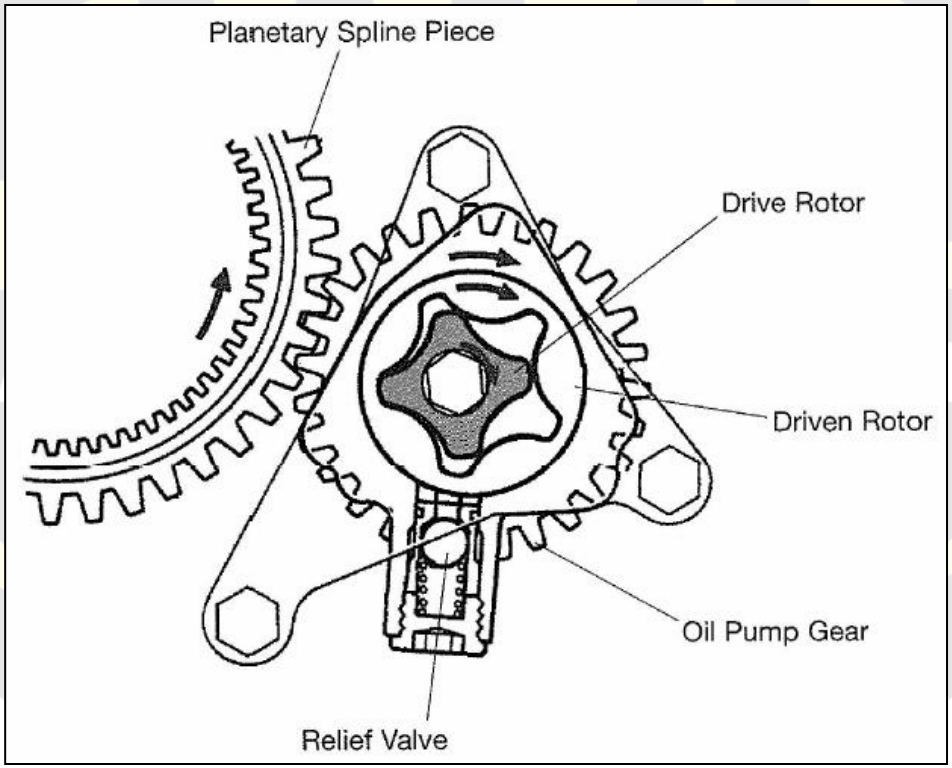

Trochoid Pump Operation

The pump is driven by the outer gear on the planetary spline piece.

Oil is circulated on the gears and friction areas through paths and channels.

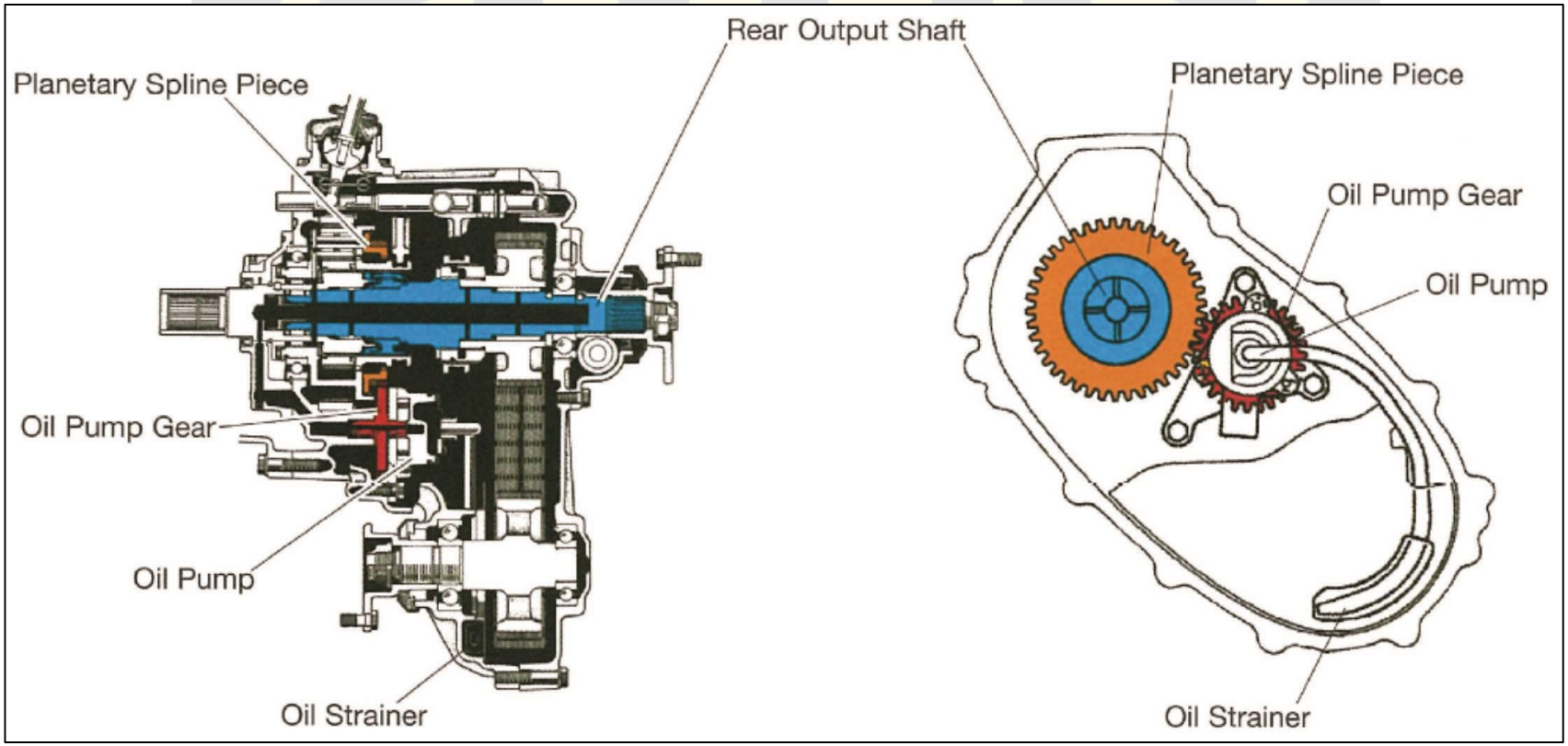

Center Differential Assembly

The all wheel drive (AWD) transfer cases use a differential between the front and rear drive axles (shafts).

This is due to the front wheels traveling at a different distance through turns than the rear wheels.

This is why its important that all 4 wheels are the same brand and size.

As well as the Same pressure and wear pattern to prevent wheel hop during turns.

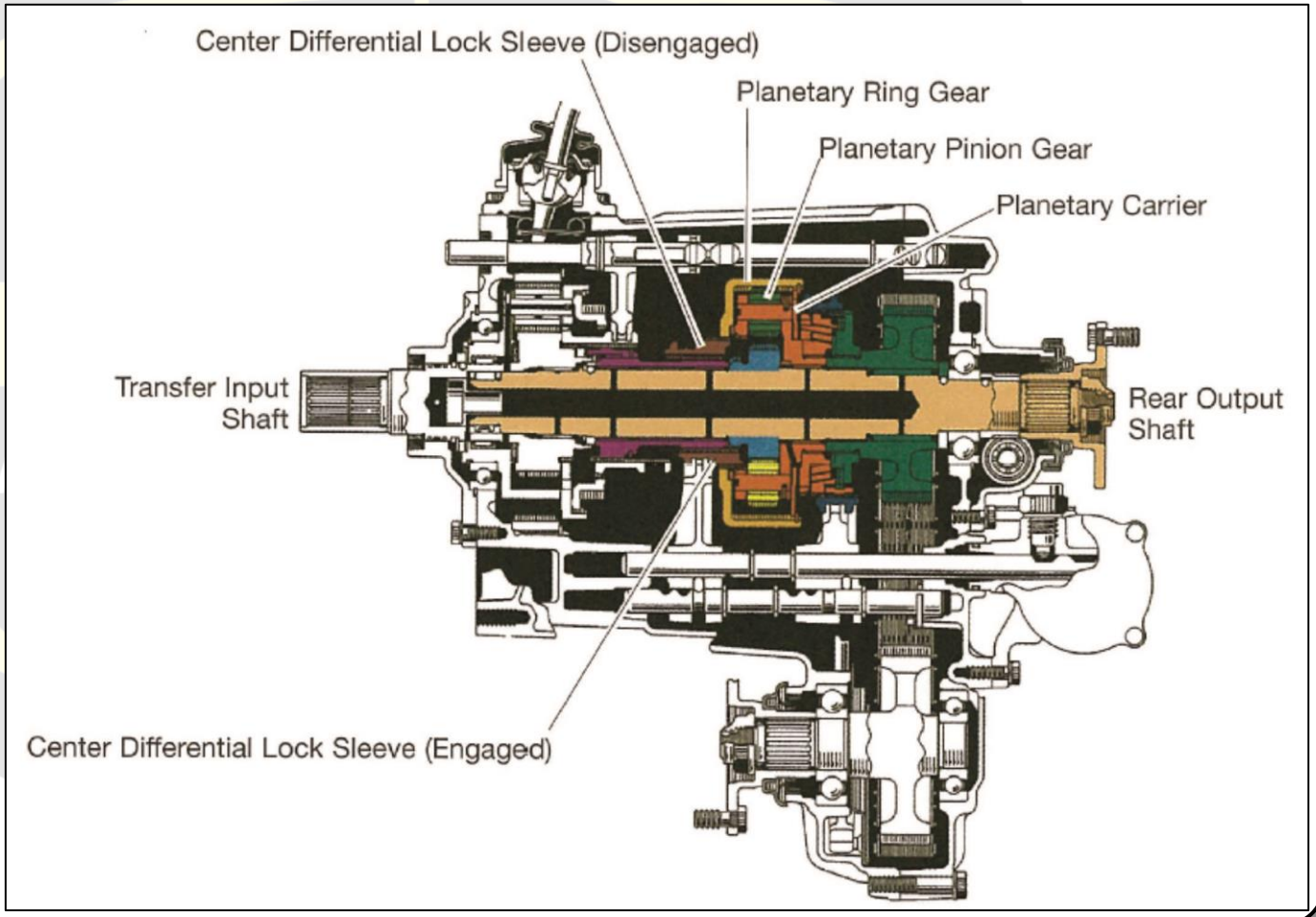

Center Differential Assembly Free Mode Straight

The planetary assembly in the center differential distributes the power between the front and rear shafts.

When the vehicles is operated in a straight line there is almost no speed difference between the front and rear wheels. The transfer clutch hub, front drive sprocket and rear output shaft are rotating at the same speed with the center differential.

Driving force from the transfer clutch hub is transmitted to the front and rear wheels through the planetary ring gear to the pinion carrier and sun gear.

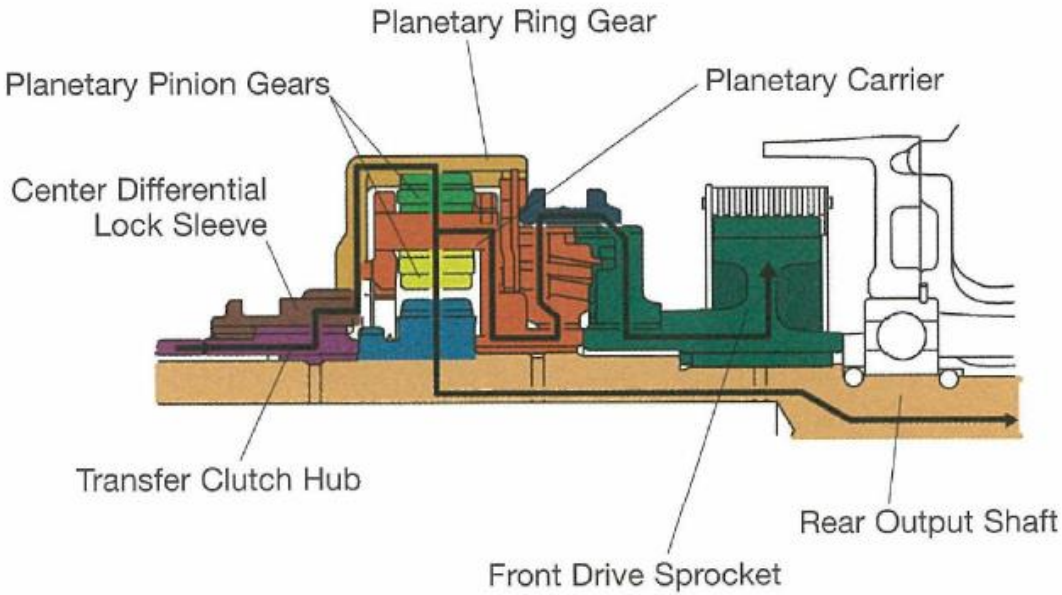

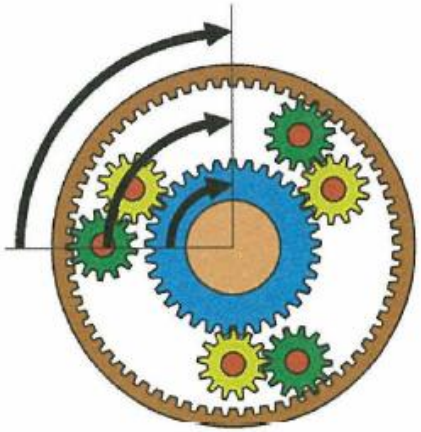

Center Differential Assembly Free Mode Turning

When a difference in speed is generated between the front and rear wheels during a turn, the pinion gears rotate and absorb the speed difference.

The carrier rotates faster but in the same direction as the ring gear. Causing the outer pinions gear to rotate in the opposite direction while rotating around the ring gear in the same direction.

The inner pinion gears rotate in the same direction as the ring gear. The rear output shaft rotation becomes slower than the drive sprocket by the amount of rotation the inner and outer pinion gears.

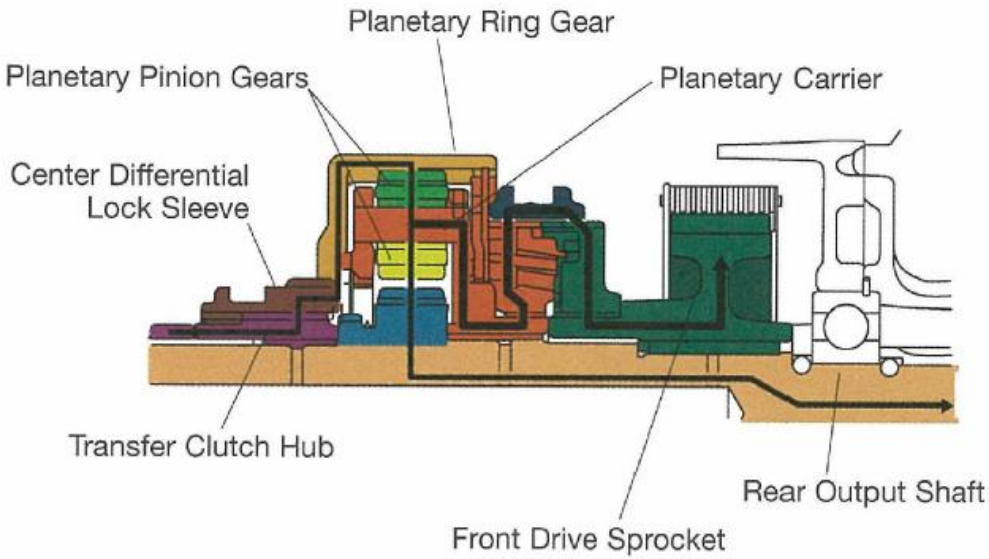

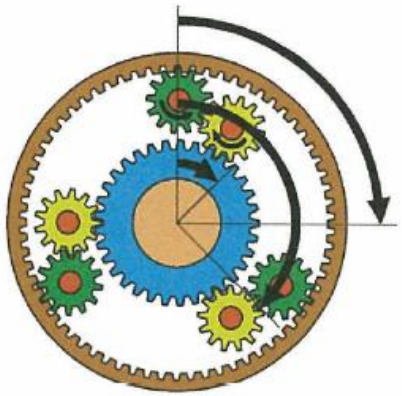

Center Differential Assembly Lock Mode

The center differential like the front and rear differentials is an open differential that distributes the torque to the shaft with the least traction.

In the 4WD mode if one wheel loses traction all the torque is sent to the shaft with the least traction causing the vehicle to become stuck.

By locking the center differential the torque is distributed to both drive shafts equally.

This is the same as a part time or conventional transfer case and the opposite drive shaft will move the vehicle.

The locking sleeve in the center differential moves to the right allowing the inner teeth of the lock sleeve to mesh with the rear output shaft.

At this point the center differential stops operating and the transfer case is locked.

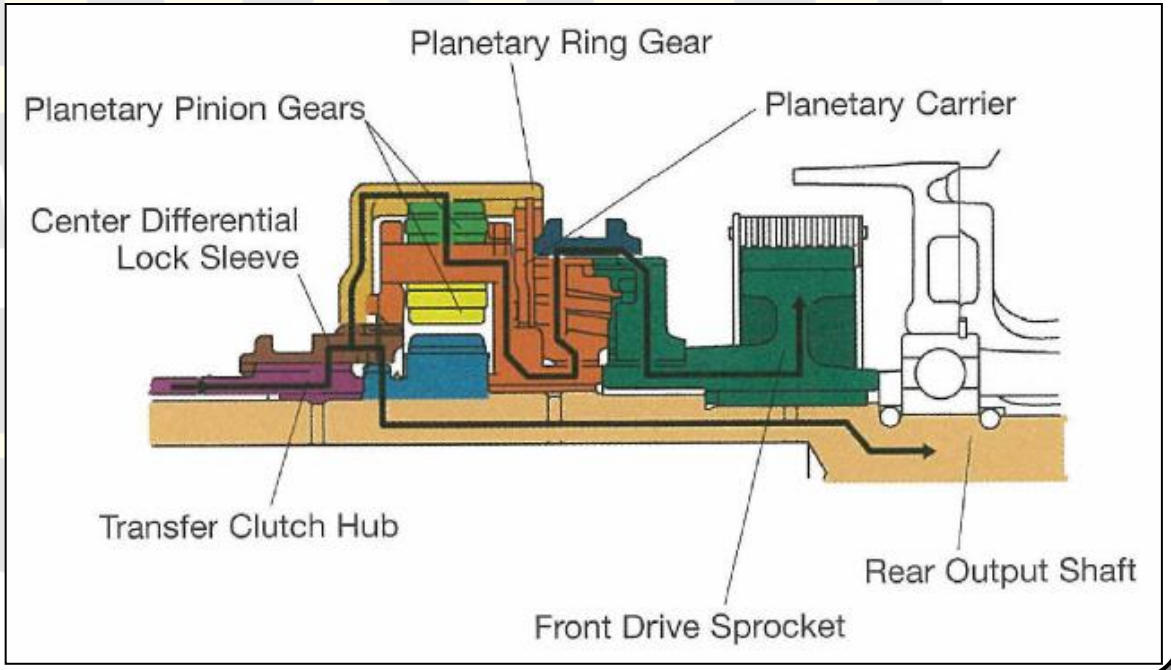

Torsion Limited Slip Differential (LSD)

Unequal tire size will cause different axle speeds. This will increase wear at the drive axle and/or center differential.

A Torsen Limited Slip Center Differential (LSD) is equipped in full time and multi mode electronic shift transfer cases found in some 2003 and later model Toyota vehicles.

The Torsen LSD is not designed to be disassembled and replaced only as an assembly.

The LSD has a planetary gear set assembly with a sun gear and ring gear.

Including 4 clutch plates that distribute torque to the wheels with traction.

The clutches apply instantly and compensates for differences in the front and rear wheel speed.

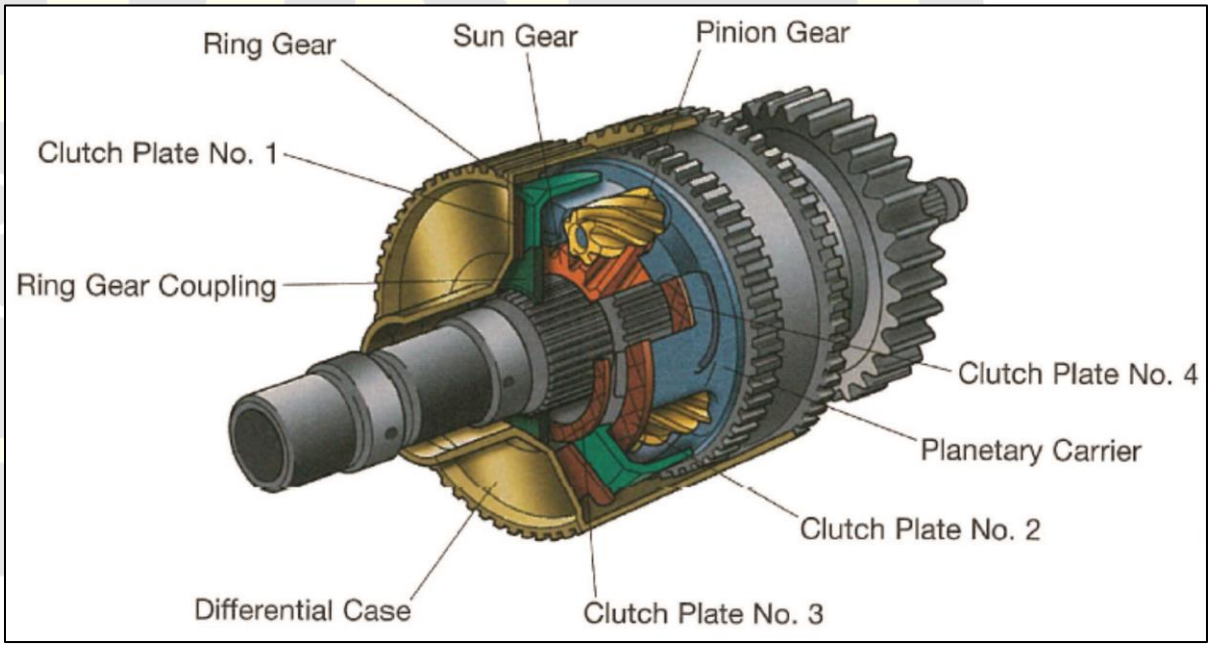

Torsion Limited Slip Differential (LSD)

When the front drive shaft is spinning faster than the rear drive shaft.

The sun gear and ring gear will create a thrust that will transfer the torque to the axle with traction.

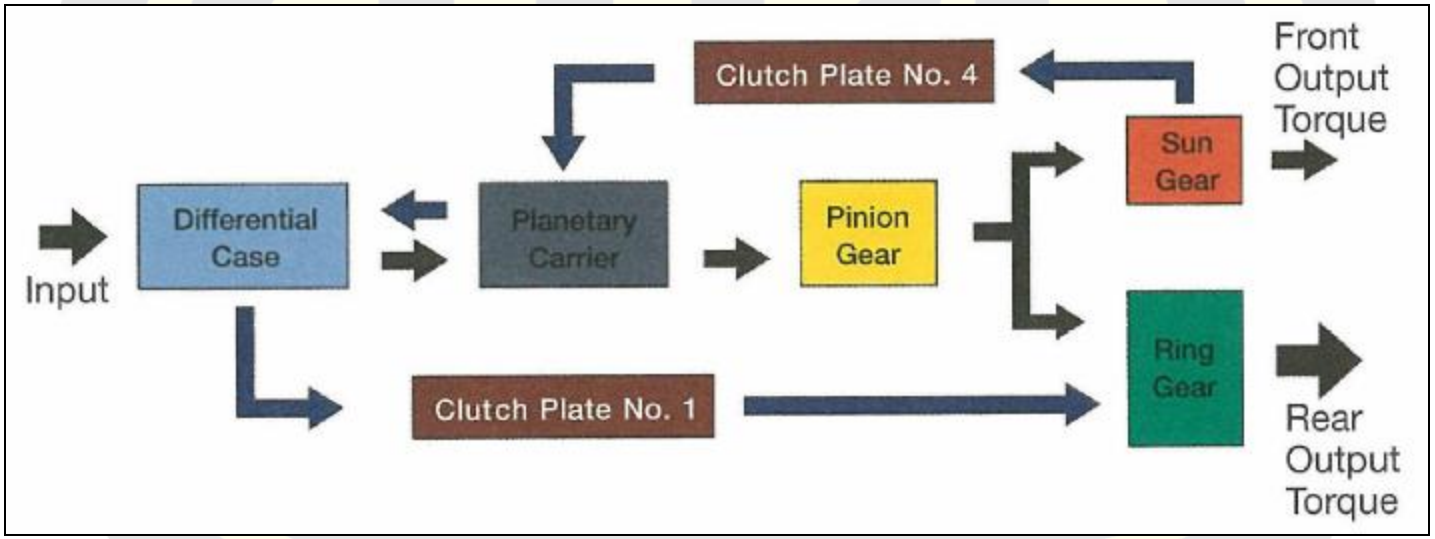

Torsion Limited Slip Differential (LSD)

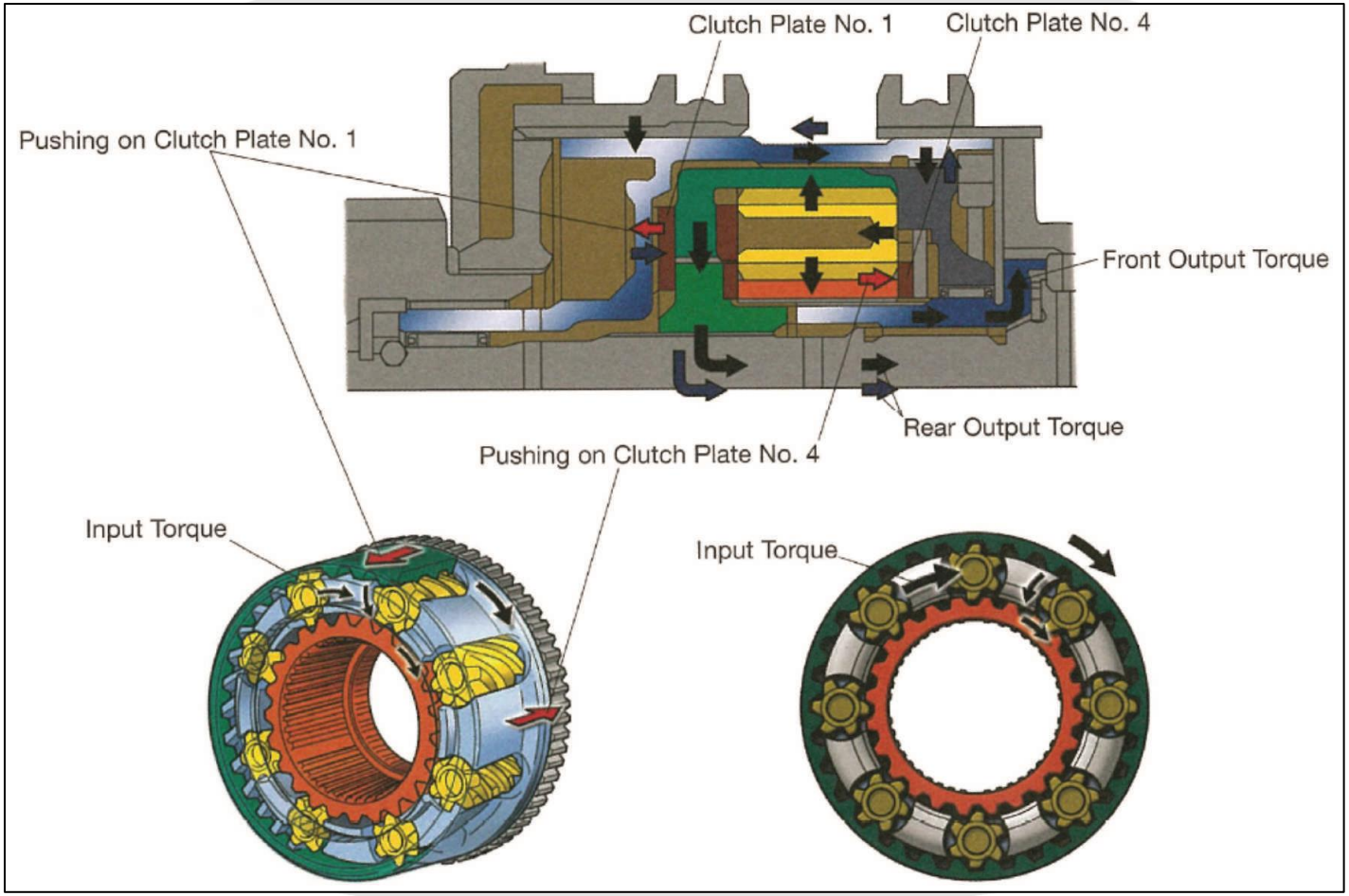

Planetary Gear Set Assembly

The input shaft is splined to the sun gear.

Four pinions are integral to the carrier.

A splined piece is attached to the rear of the carrier and internal gear teeth of the spline piece can be engaged with the external teeth of the high/low clutch sleeve.

The ring gear is attached to the transfer case and internal teeth are meshed with the pinion gears.

The high/low clutch sleeve can be engaged with the splines on the rear portion of the input shaft.

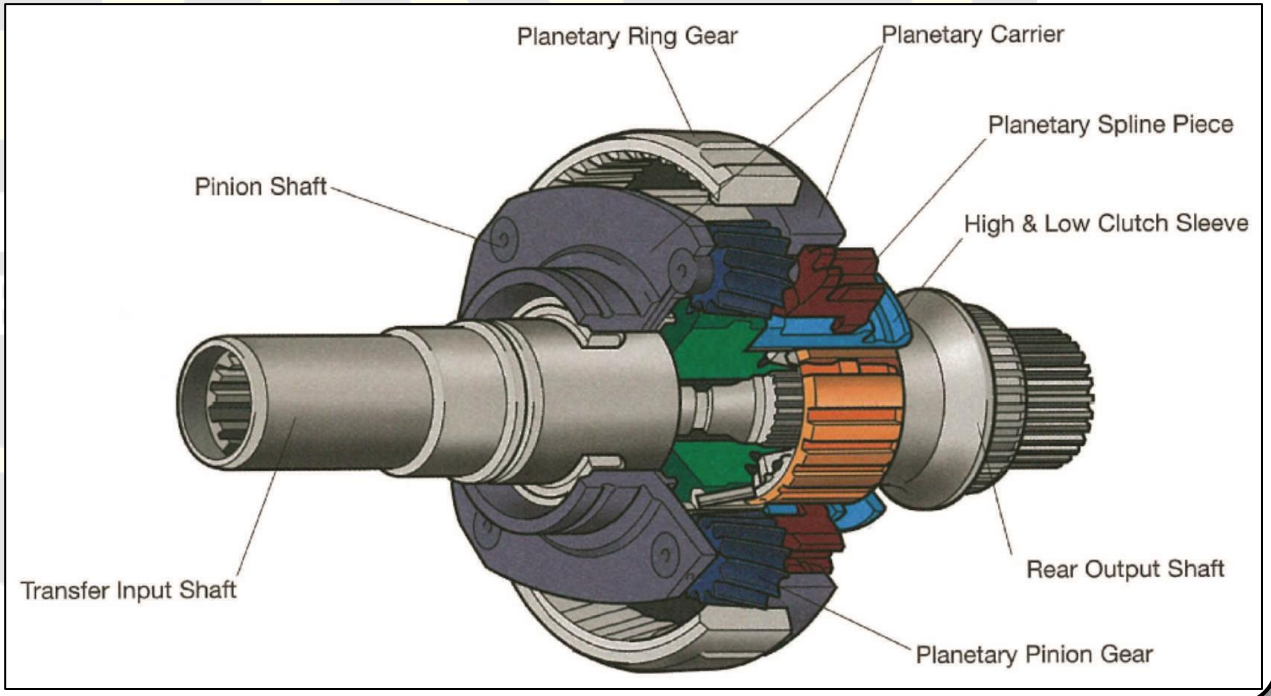

Planetary Gear Set Assembly

The high/low clutch sleeve engages the planetary gear assembly to provide gear reduction for low speed.

Connecting the input shaft to the output shaft for high speed maneuvers.

In the H2 or H4 high position engine power is transmitted from the input shaft to the rear output shaft locked by the clutch sleeve .

The high/low clutch sleeve slides over the splines of the high/low clutch hub as it moves left.

The internal splines engage the input shaft splines locking the input shaft to the output shaft.

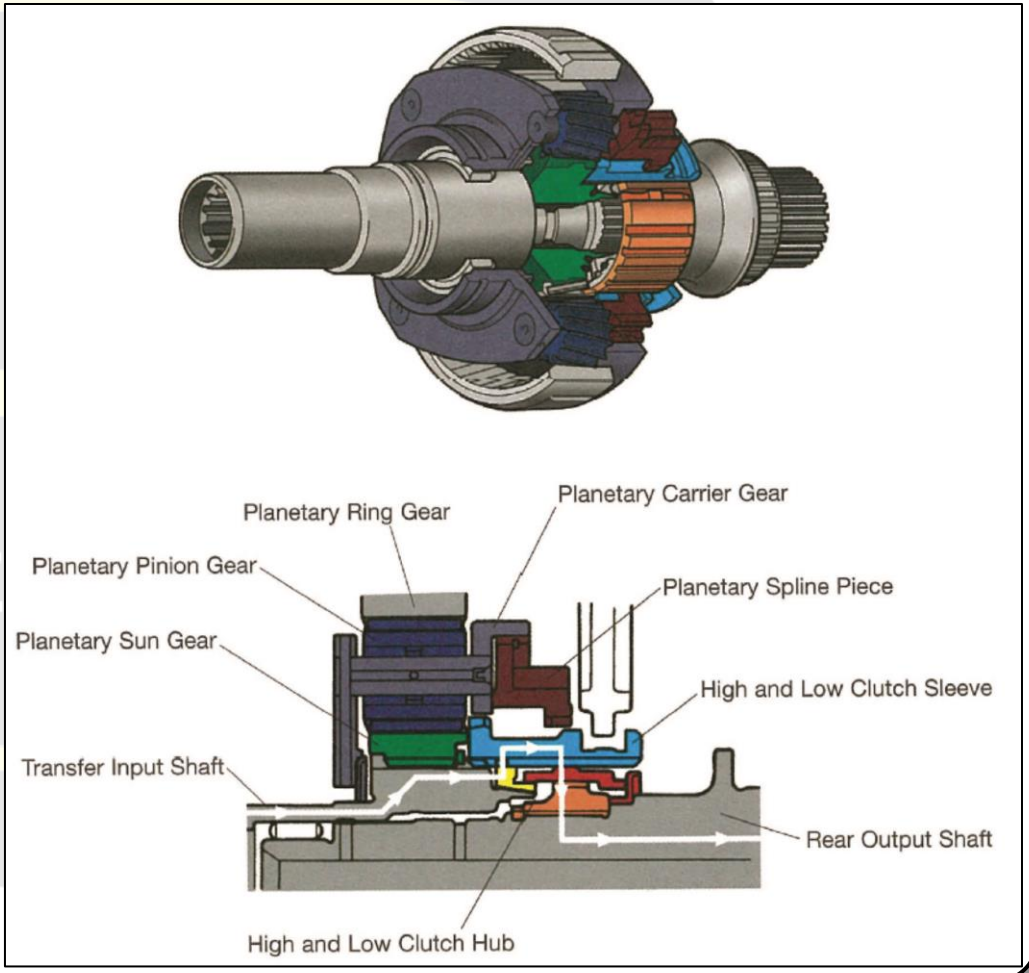

Planetary Gear Set Assembly

The low 4 position transmits engine power from the input shaft to the output shaft through the planetary gear assembly.

The high/low clutch sleeve is moved to the right and engages the planetary spline piece and the planetary carrier.

The sun gear drives the pinion gears rotating the carrier at a slower speed.

This provides gear reduction causing the output shaft to rotate at a slower speed than the input shaft.

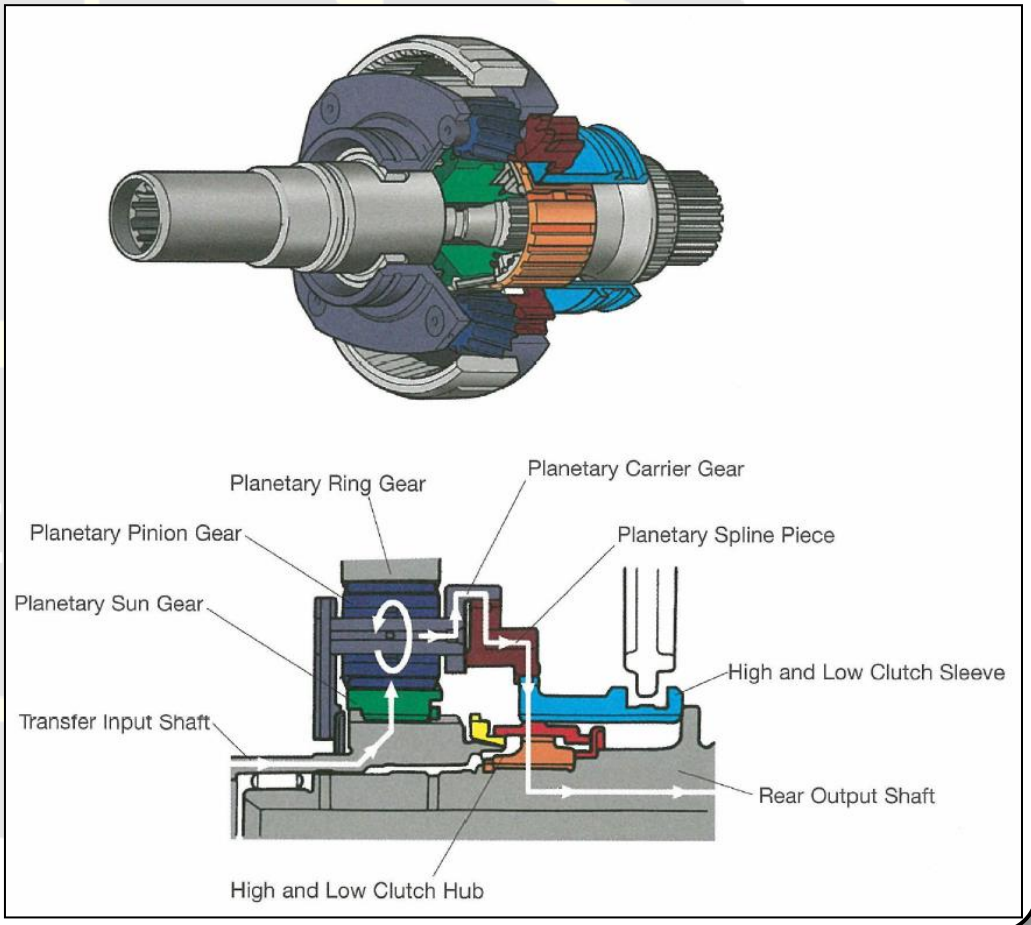

Planetary Gear Set Assembly

The shift from L4 to H4 while driving is provided by the use of a synchro mechanism similar to that of a standard transmission.

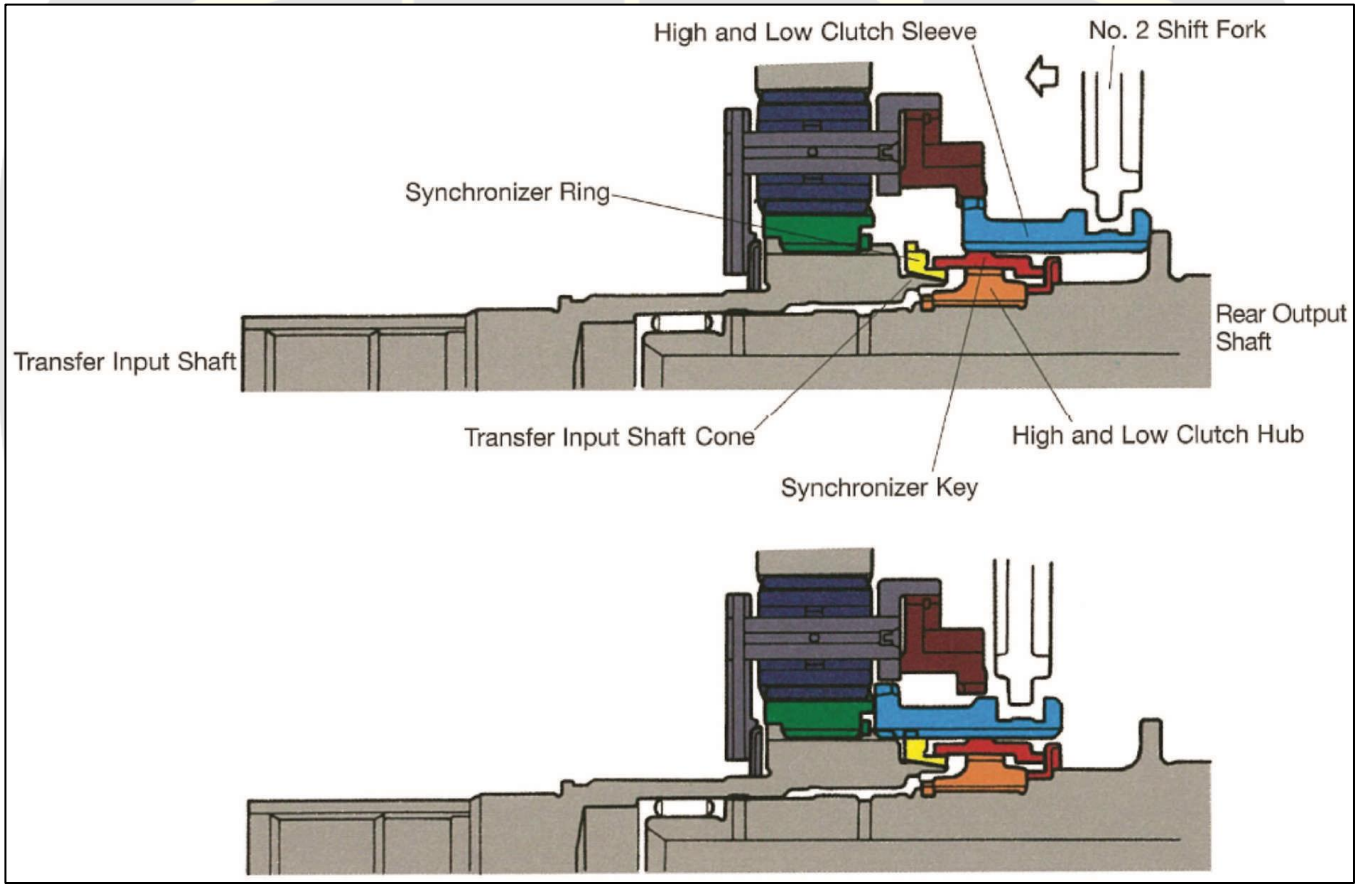

Part Time 4 Wheel Drive Systems

These vehicles are mostly operated in 2WD mode directing the power to the rear wheels. When driver manually selects 4WD mode equal torque is directed to all 4 wheels.

This type of system consists of front and rear differential with a center transfer case (no center differential).

The part-time 4WD system is designed for both front and rear to axles rotate at the same speed when 4WD mode is engaged. The power is split to front and rear axles at 50%.

4LO is to be used Only in very slippery traction conditions at very low speeds.

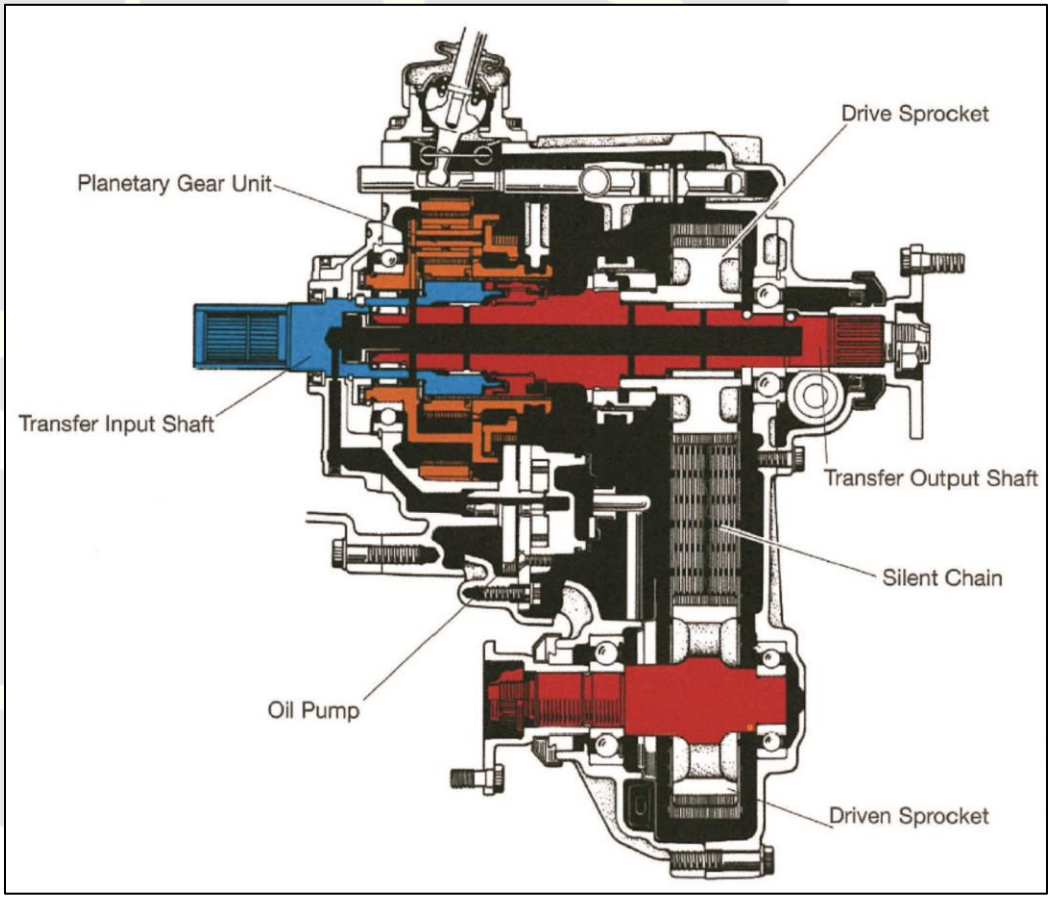

Part Time 4 Wheel Drive Systems

Operating this system in 4WD on dry pavement this will cause the drivetrain to bind when vehicle is attempting any type of turn.

Drivetrain binding causes severe strain on various 4WD drive components. 4WD mode should only be engaged in slippery terrain such as off road driving and/or poor weather road conditions.

Part Time 4 Wheel Drive Systems

Most common part time 4 wheel drive systems used today are electronic shift operated.

The electronic shift motor (actuator) moves the shift fork to obtain 2WD/4WD and the high/low range as well.

When shifting to 4WD low, the transfer must select 4WD first then the low range.

Similar to a manual shift mechanism.

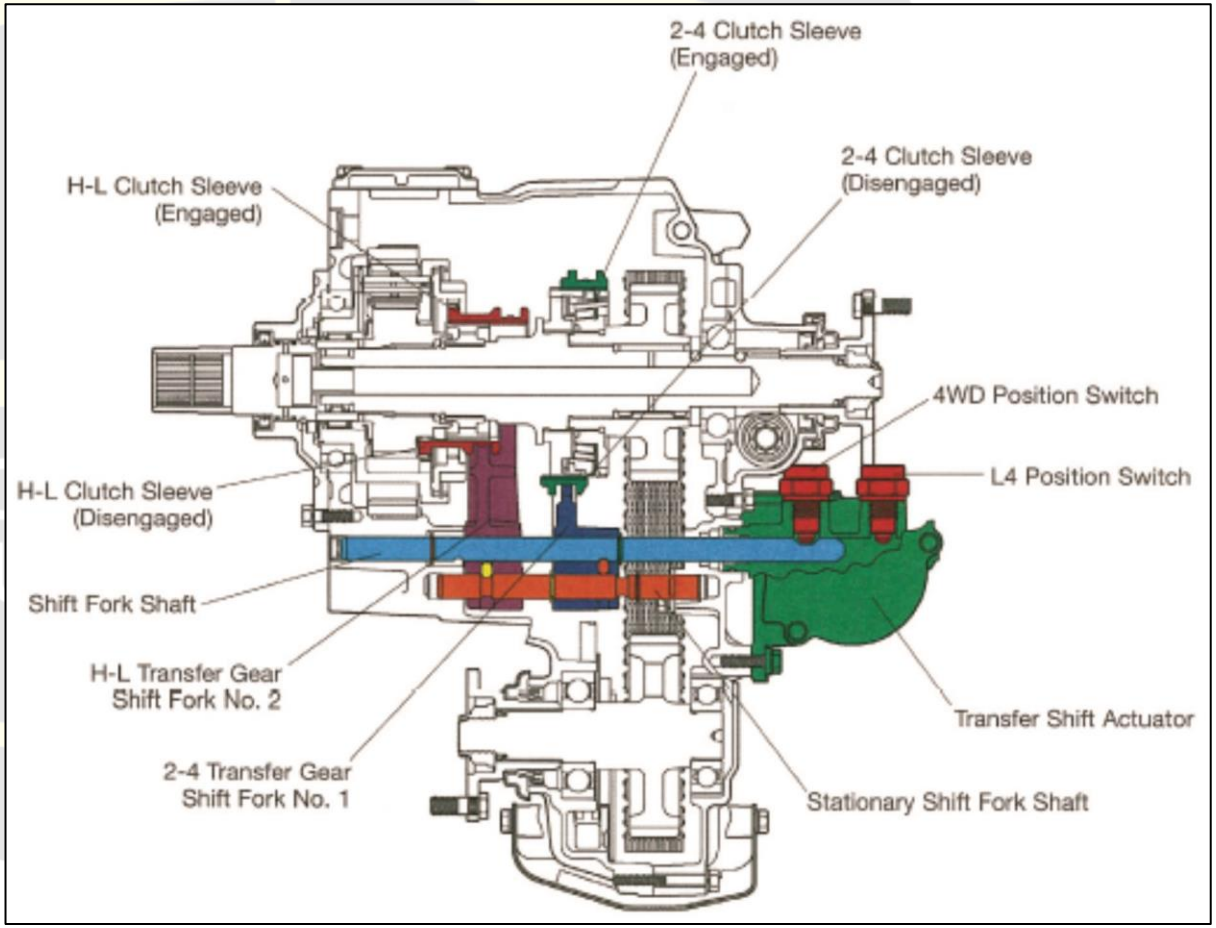

Part Time 4 Wheel Drive Systems

Interlock pins lock the shift forks to the shift fork shaft when shifting from 2H to 4H.

When the shift fork shaft is moved to the right by the actuator, the interlock pin A locks the 2-4 shift fork to the shift fork shaft.

At the same time the shift fork moves the synchronizer sleeve to engage 4 wheel drive.

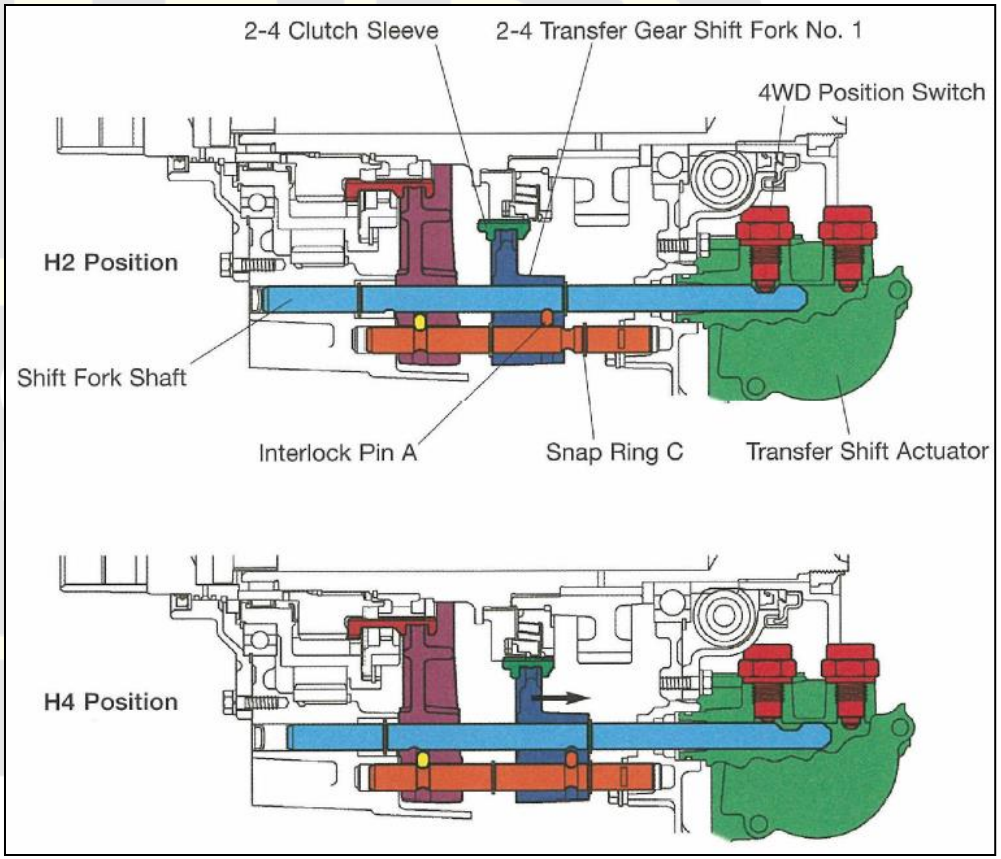

Part Time 4 Wheel Drive Systems

When shifting from 4H to 4L the shift fork shaft continues to be moved to the right by the actuator motor.

The groove in the shift shaft will align with high/low interlock pin B locking the shift fork to the shaft.

Then moving the high/low shift fork to engage the high/low shift sleeve.

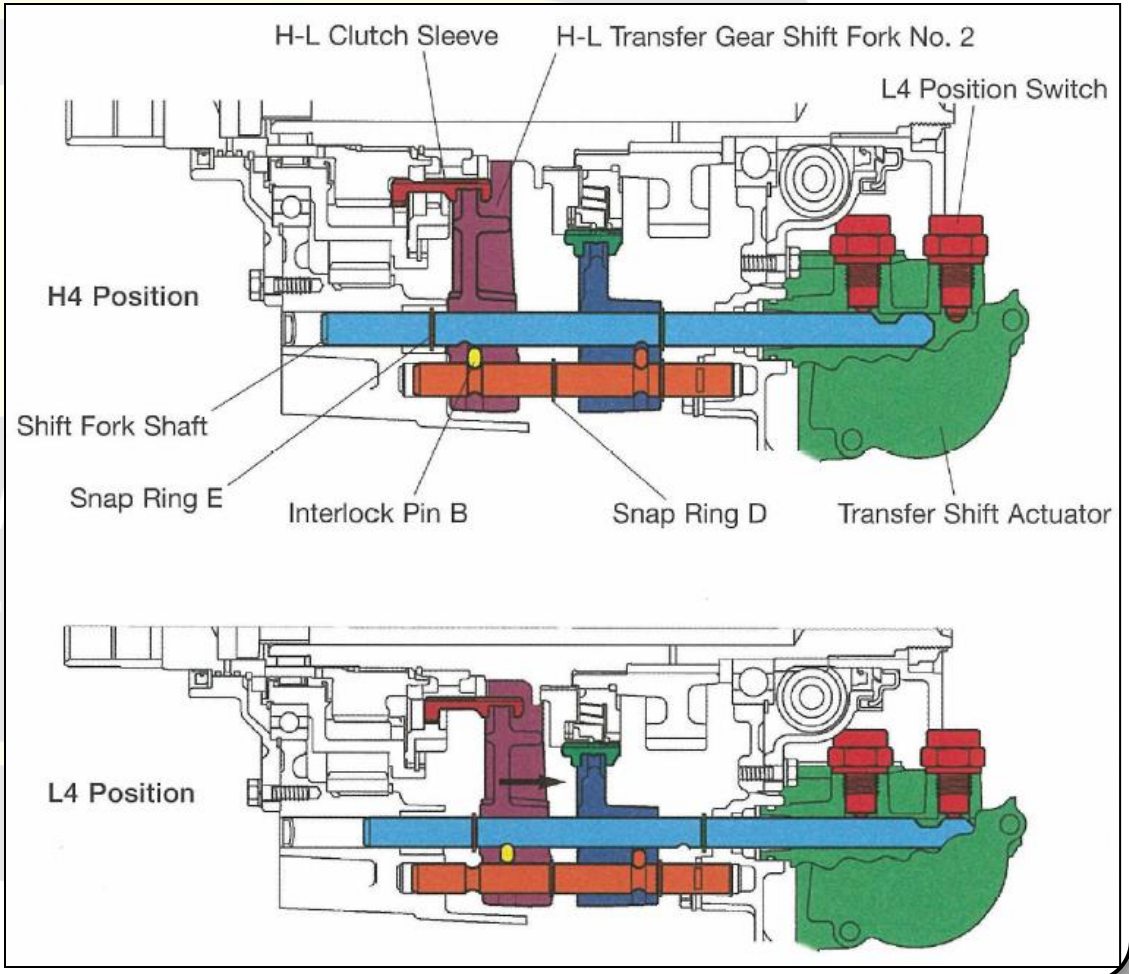

Full Time 4 Wheel Drive Systems

Full-Time 4WD Systems direct power to all 4 wheels all the time. Full-time 4WD can be operated on dry pavement at any time as well as slippery terrain unlike a part-time 4WD system.

This is the feature that Part time 4WD systems do not provide.

This is capable by using a center differential (torsion) equipped on this system.

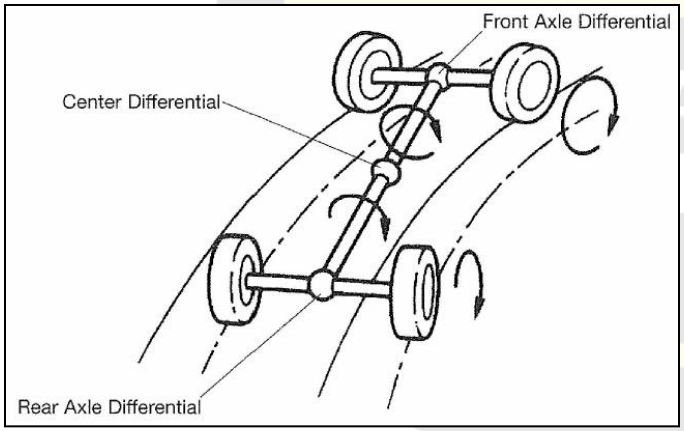

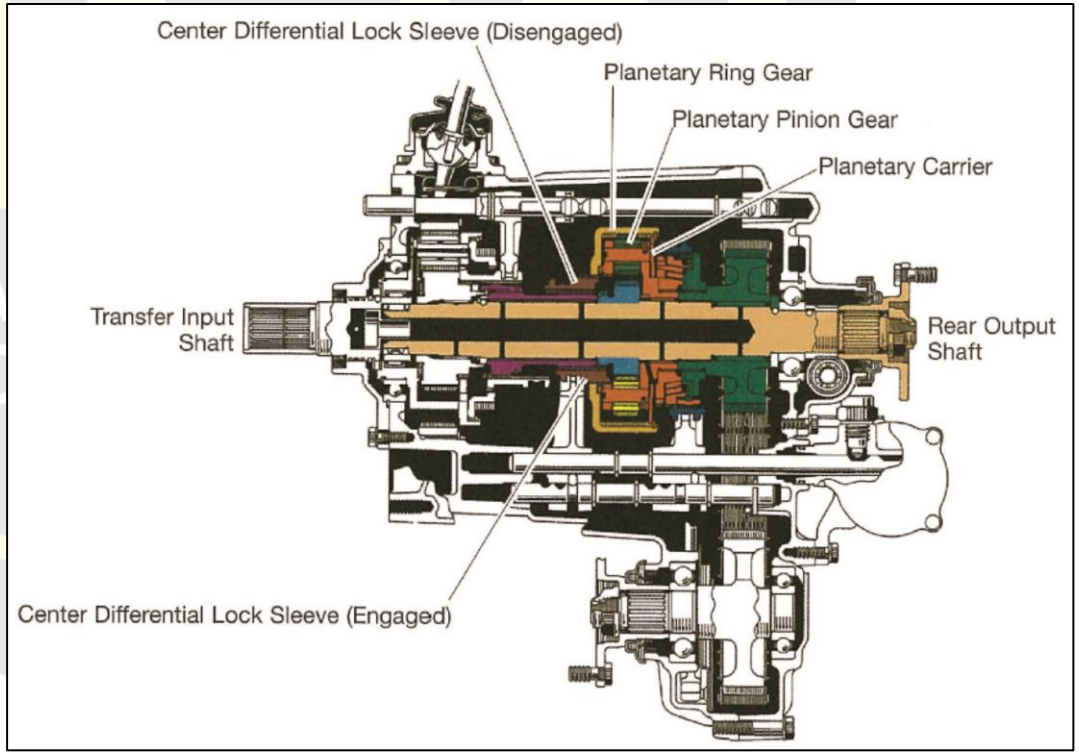

Full Time 4 Wheel Drive Systems

VF4AM Electronic shift full time 4WD system with a leaking actuator.

This system uses a dual shift motor and shift shafts.

This actuator commonly leaks and is very difficult to R&R.

The shafts should be removed along with the actuator. As you can see here it is impossible to get to the retainer clips without disassembling the entire transfer case.

It has been done without removing the shafts, but very difficult to align the gear timing when re-assembled without tearing the seals.

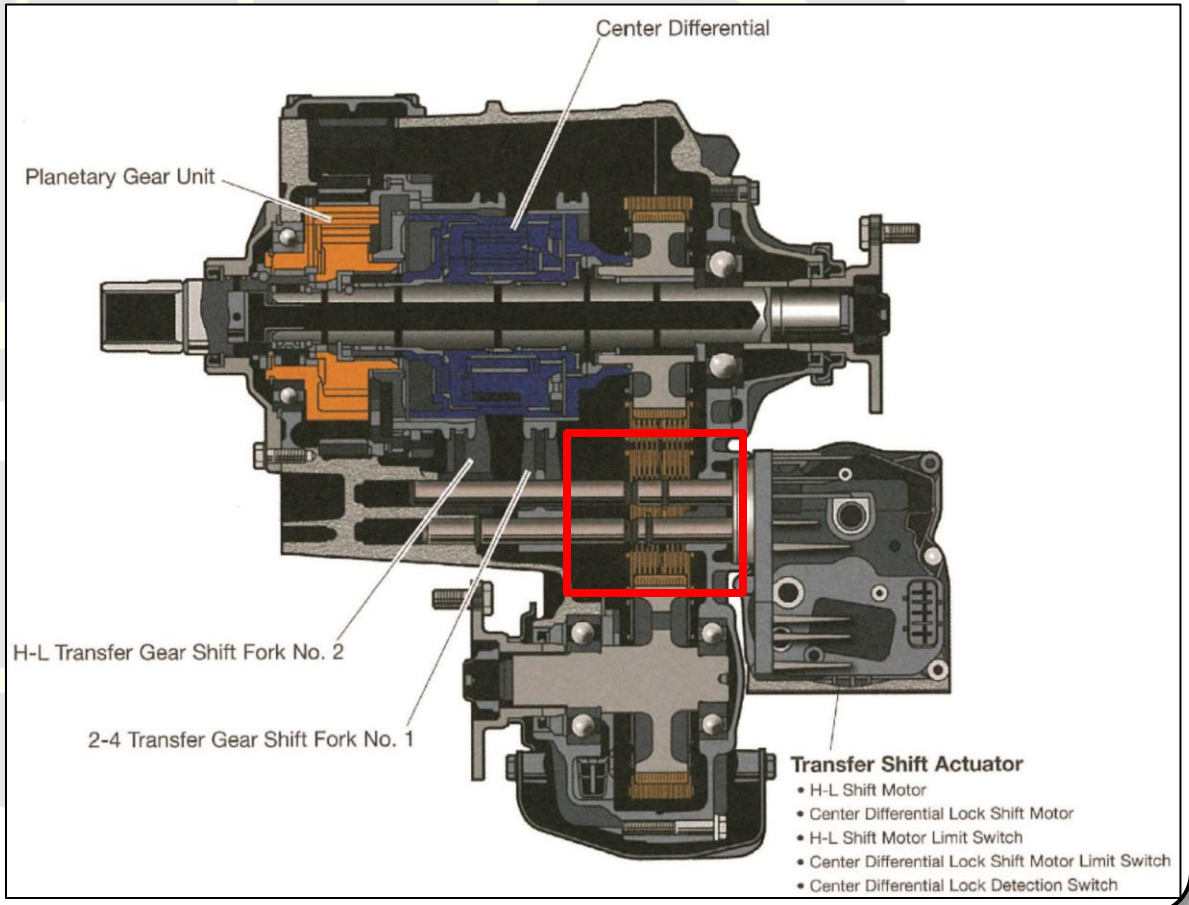

VF4AM Transfer Case Actuator (Motor) R&R

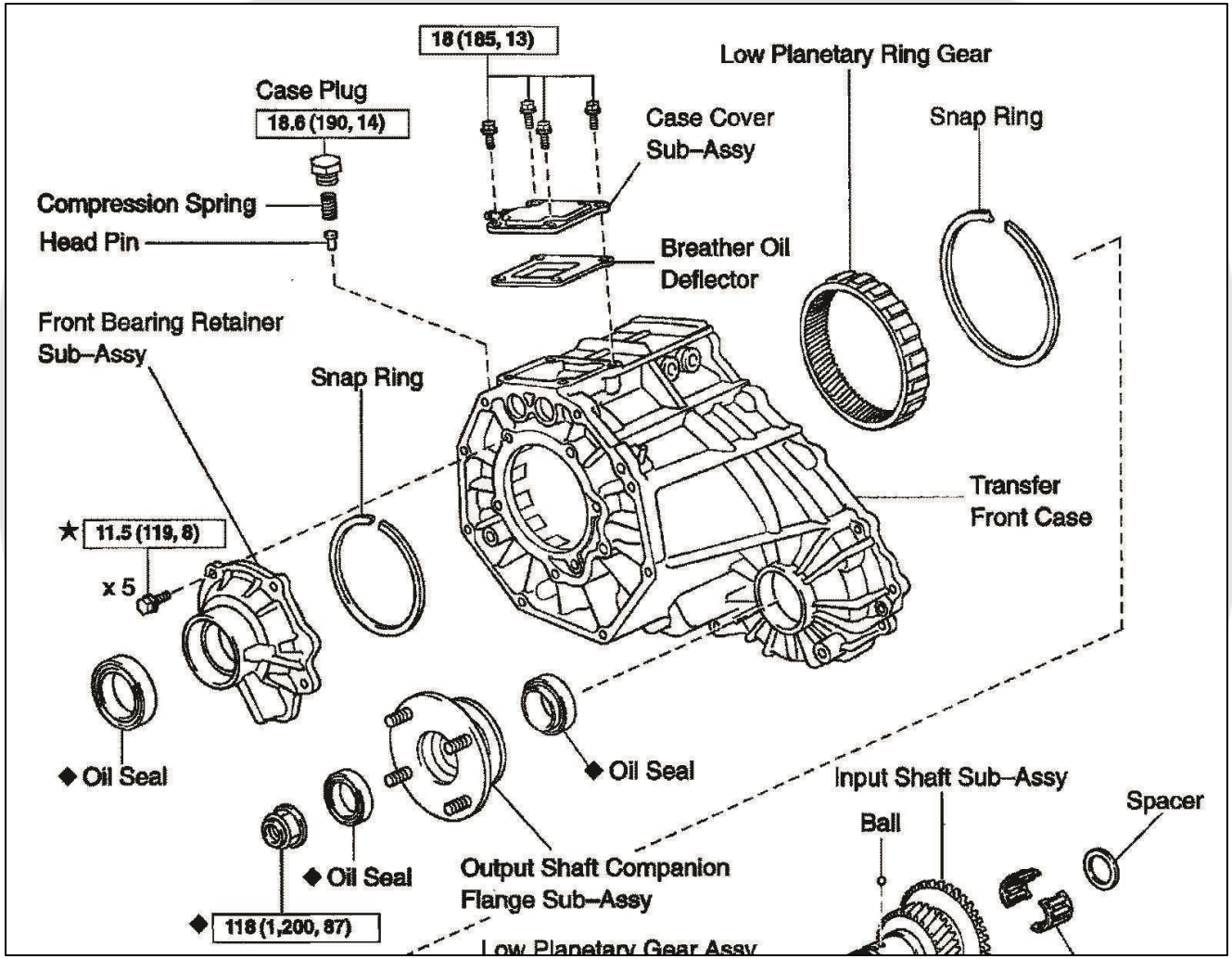

VF4AM Transfer Case Actuator (Motor) R&R

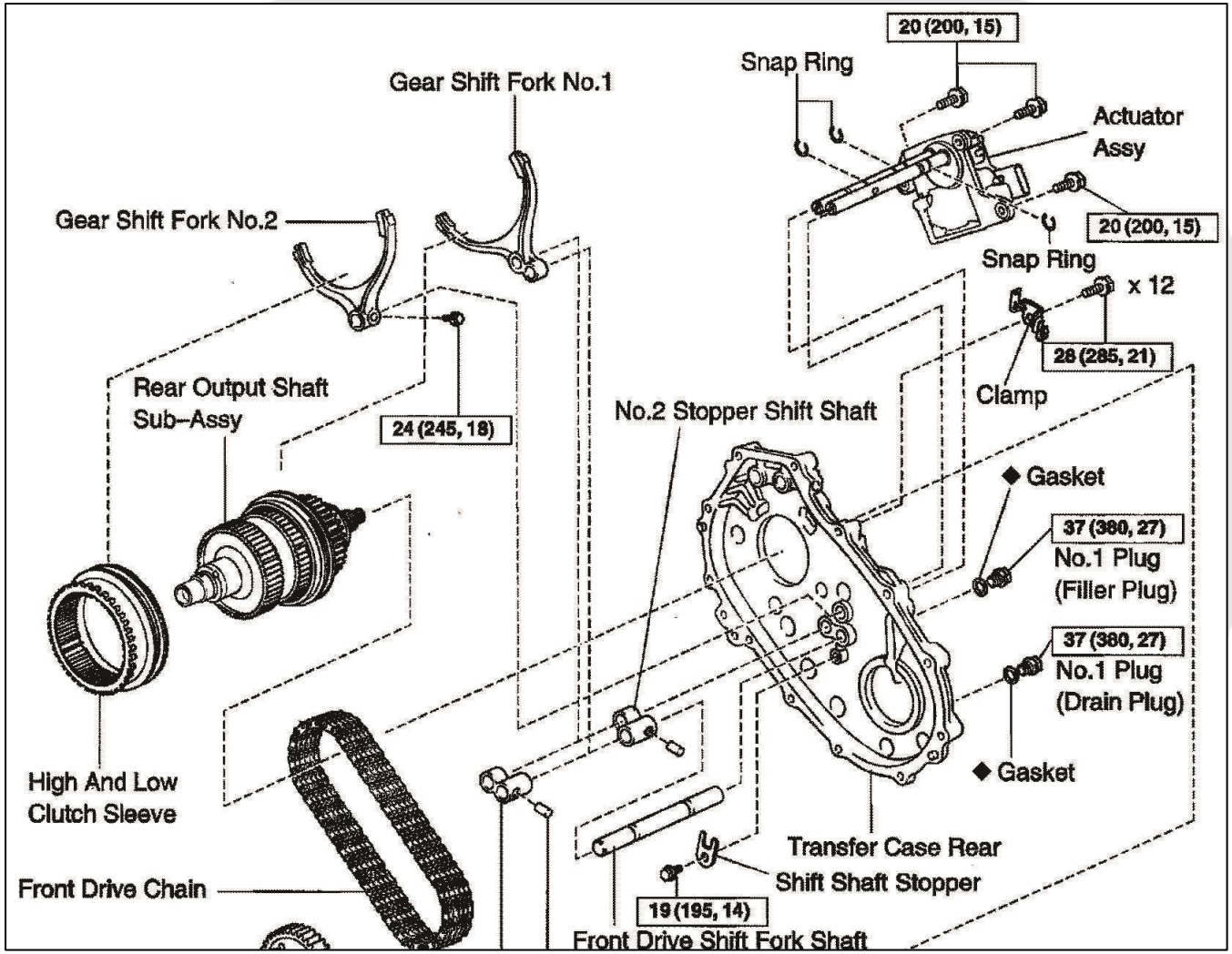

VF4AM Transfer Case Actuator (Motor) R&R

VF4AM Transfer Case Actuator (Motor) R&R

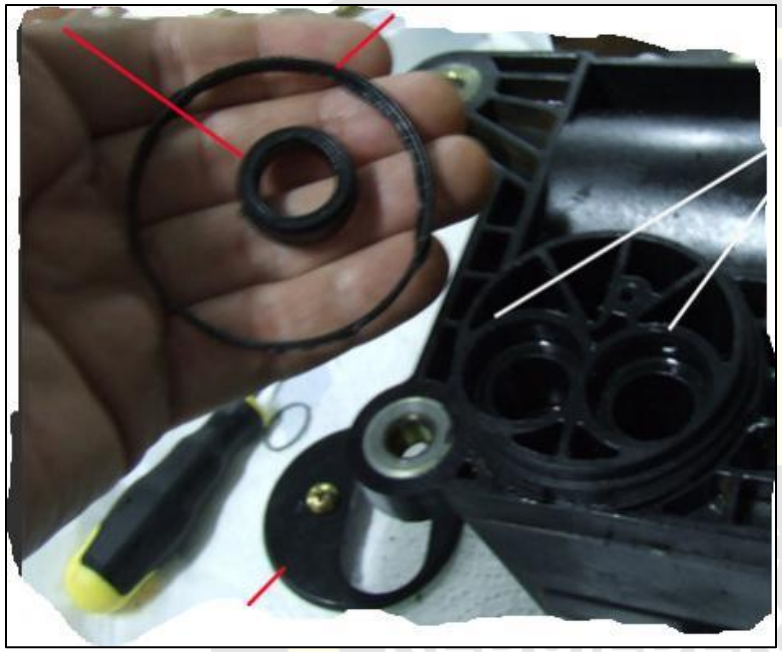

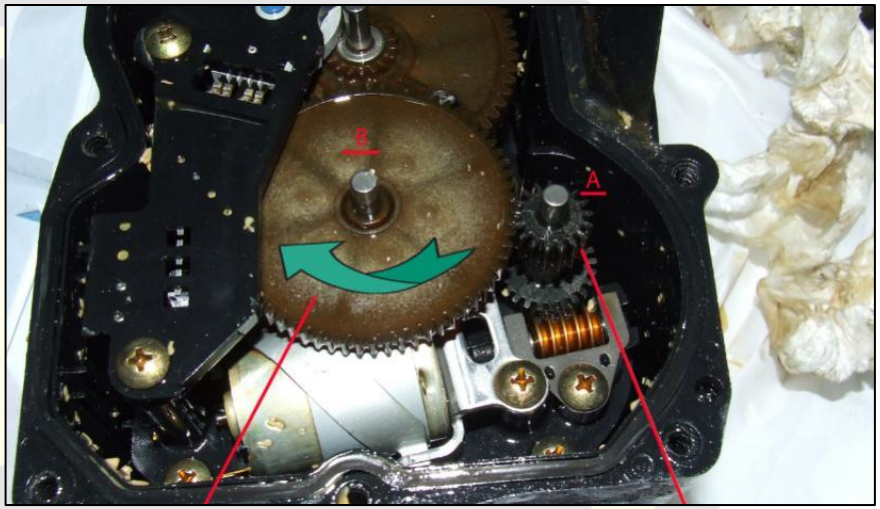

Full Time Multi Mode 4 Wheel Drive Systems

Full-Time Multi-Mode systems operate in full-time 4WD mode, but allows driver to select 2WD mode when additional traction of 4WD is not necessary. The 2WD mode provides fuel economy and reduced component wear.

The Center Differential is why this system can be driven on dry pavement in 4WD mode.

The Center differential allows the power to transfer from front to rear as necessary for better traction and prevents drivetrain binding on dry pavement.

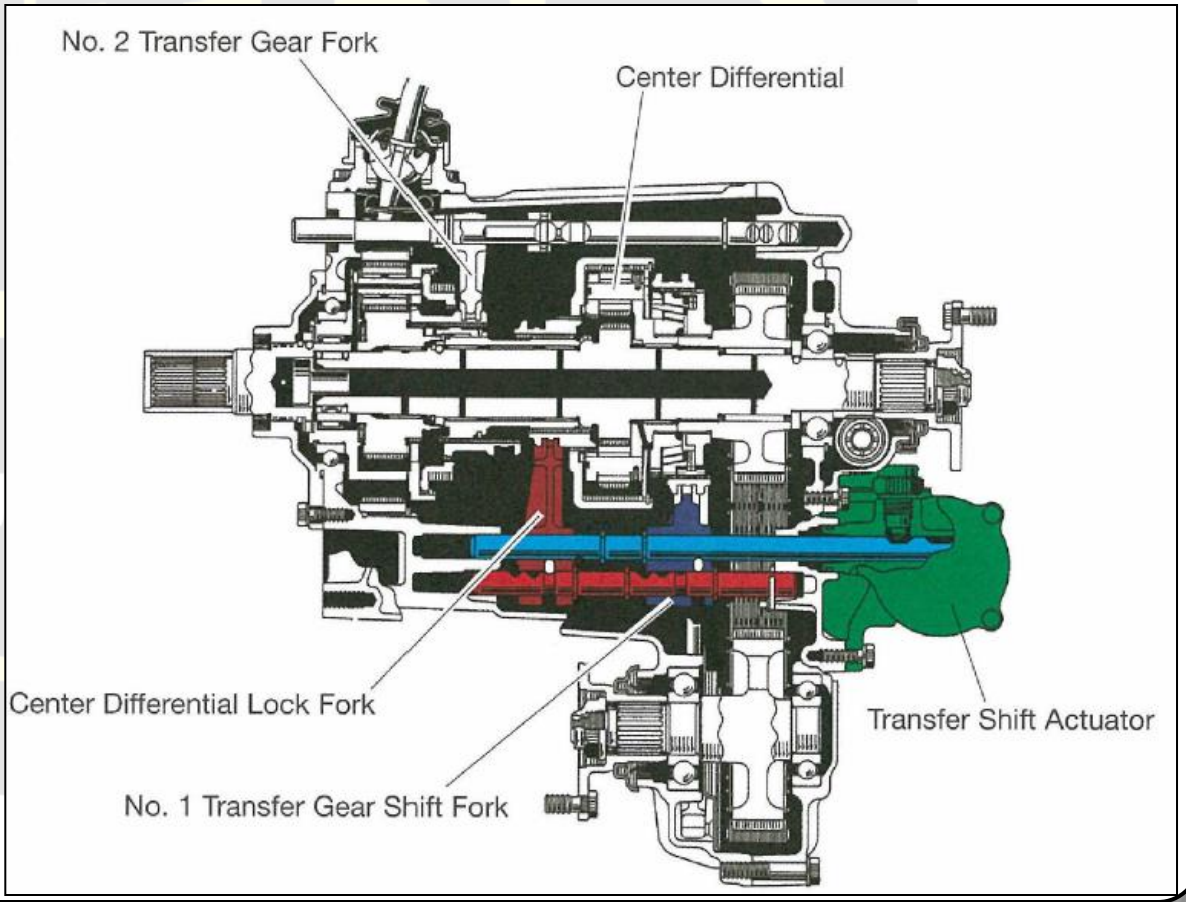

Shift-On-The-Fly

On-the-fly shifting can be engaged at the flip of a switch, shifter or turning a knob at highway speeds below 50 mph but as high as 62 mph on some models.

This is accomplished by a computer controlled shift actuator (motor) to shift between 2WD, 4WD high or 4WD low.

Typical 4WD Electronic Control Unit (ECU) Wire Diagram

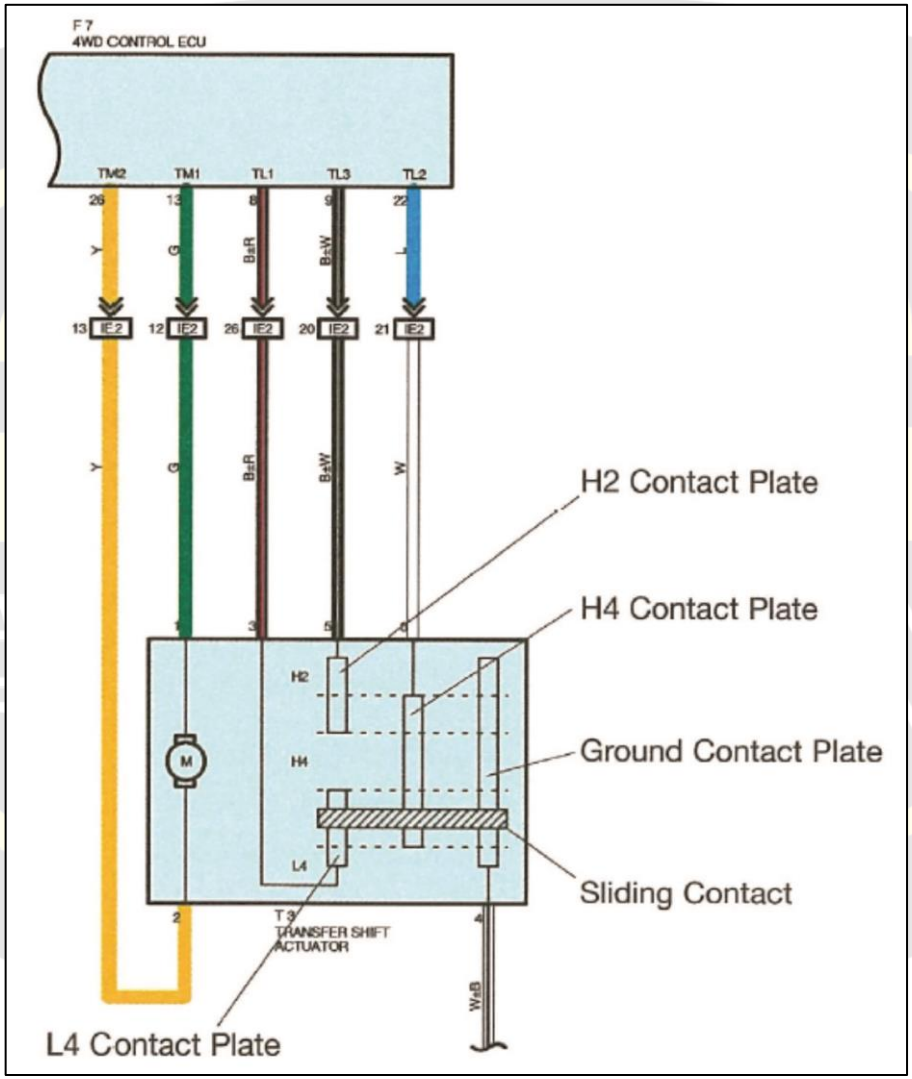

Electronic Shift Control

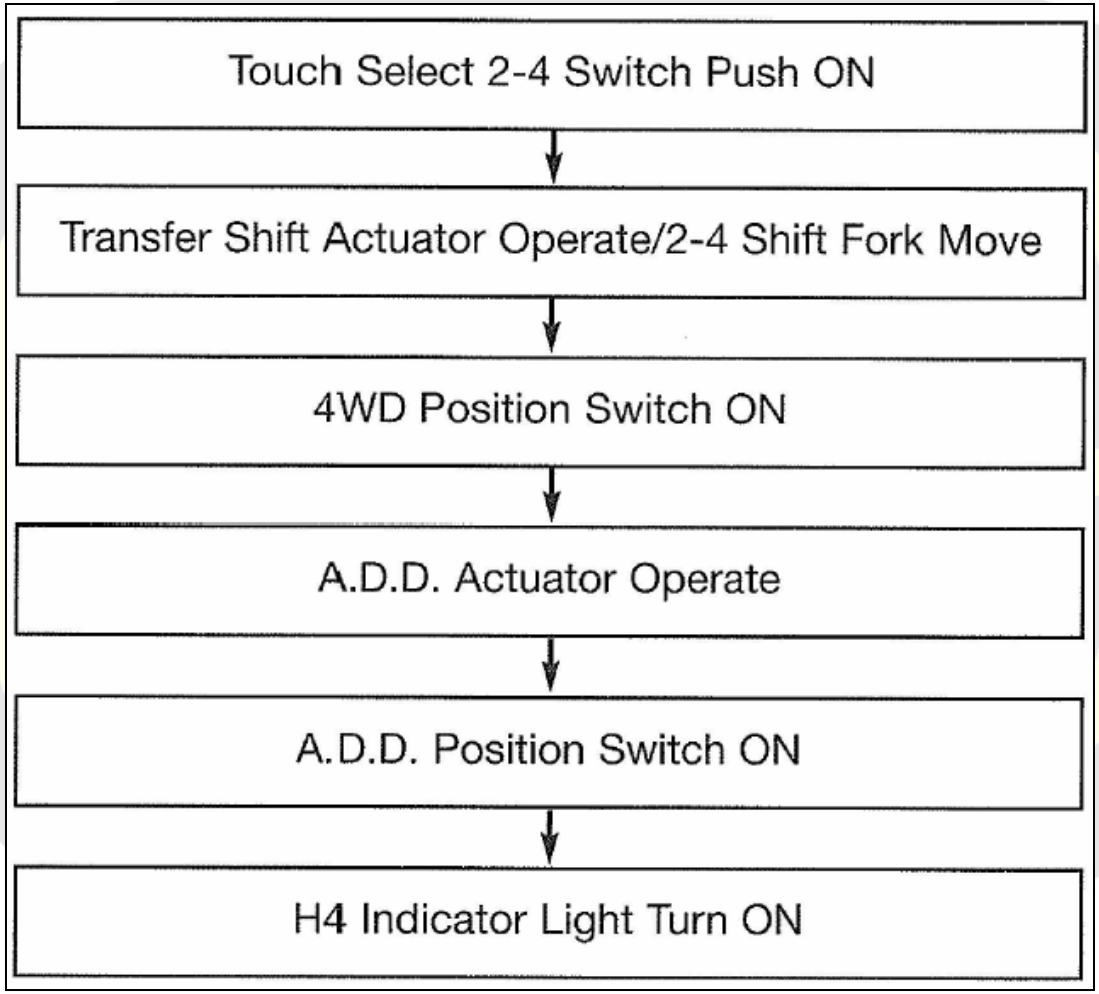

Automatic Disconnecting Differential (A.D.D.)

The A.D.D. allows the 4WD to be selected while the vehicle is moving. The front axle is locked after the shift into 4WD.

The A.D.D. in 2WD disengages wheels from driving the front differential and driveshaft preventing any load on the internal transfer case components.

On earlier 4WD systems the front wheel hubs were locked to the axles manually or automatically when shifted to 4WD. The A.D.D. system eliminates the need for locking hubs.

The front differential is an open type differential. If one wheel slips all torque will go to the wheel with the least amount of traction whether A.D.D. is activated or not.

Automatic Disconnecting Differential (A.D.D.)

The 4WD ECU controls the A.D.D. actuator and indicator lights on the dash.

The ECU activates the actuator when the transfer case is shifted into 4WD.

The ECU waits until the 4WD position switch signal to activate the actuator.

The clutch sleeve will engage the differential side gear closing the A.D.D. position switch when the actuator moves.

This signal notifies the ECU that the axle is engaged and the 4WD indicator light illuminates on the instrument cluster.

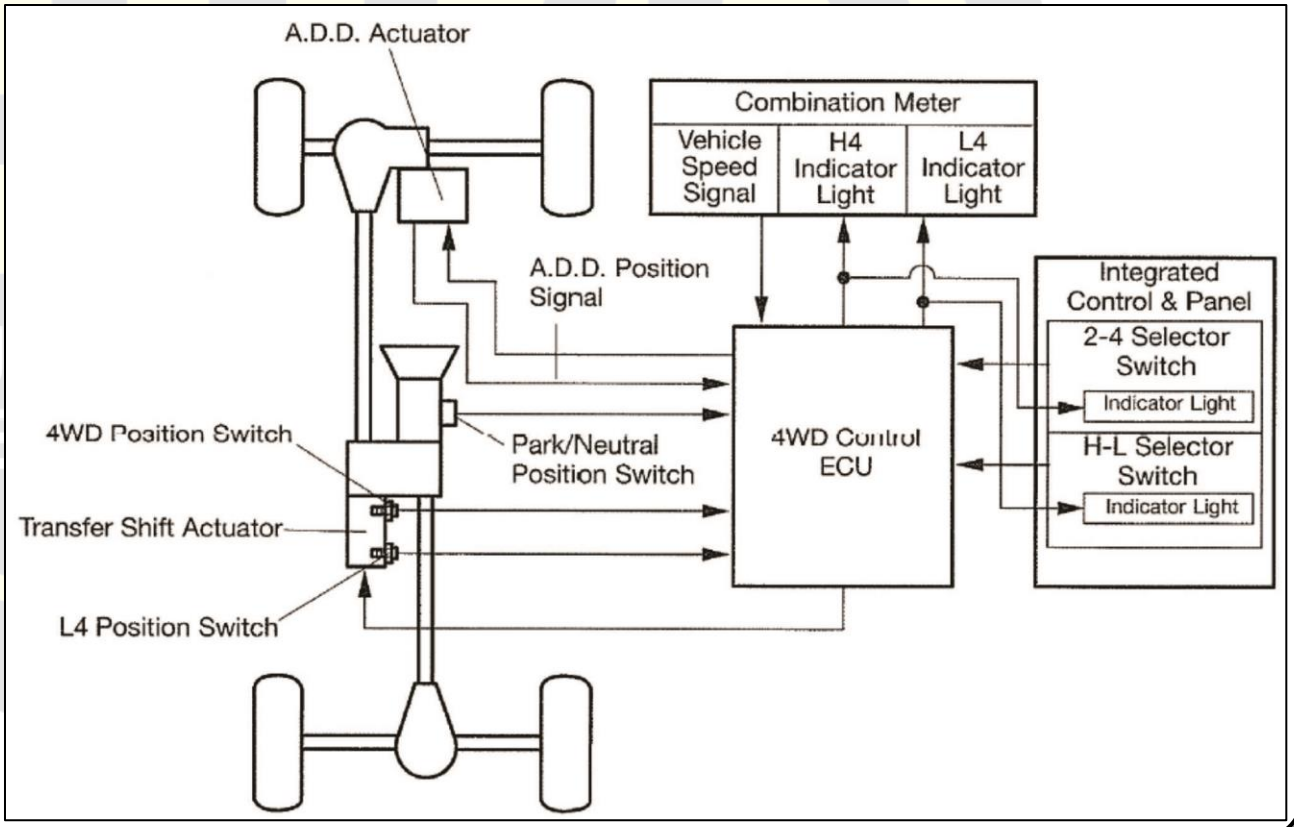

Automatic Disconnecting Differential (A.D.D.)

The right axle is connected to the differential side gear and intermediate shaft via the movable clutch sleeve. With the side gear disconnected from the axle, the left axle still turns the left side gear just like a slipping wheel with no traction.

The pinions just rotate the right side gear. With no load and well lubricated there is no wear to the components.

When 4WD is selected the A.D.D. locks the front axle to the side gear.

Coupling the side gear to the axle and the front differential sends torque to both front wheels.

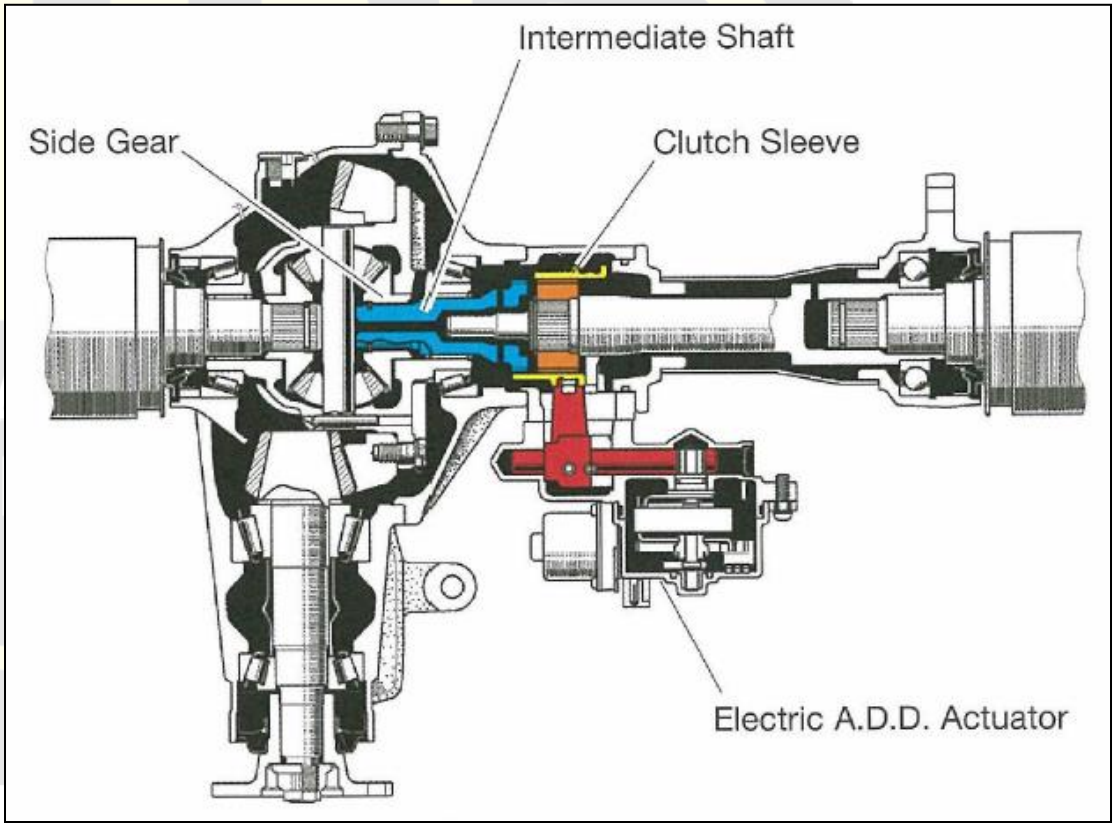

Automatic Disconnecting Differential (A.D.D.)

The clutch sleeve that engages the axle to the intermediate shaft and side gear is moved by the actuator.

The actuator is operated by vacuum or electronically.

A spring loaded wait mechanism is used to allow the splines of the Intermediate shaft and clutch sleeve to mesh before the sleeve and shaft engages.

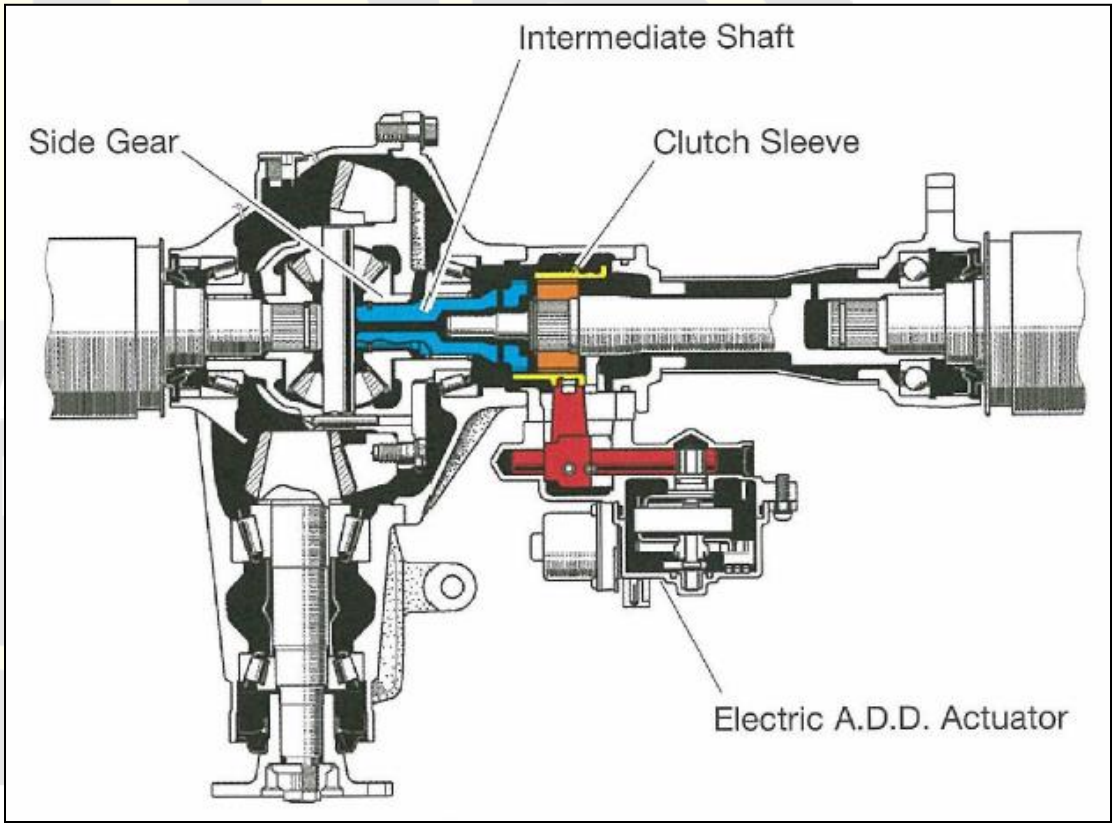

Automatic Disconnecting Differential (A.D.D.) Construction

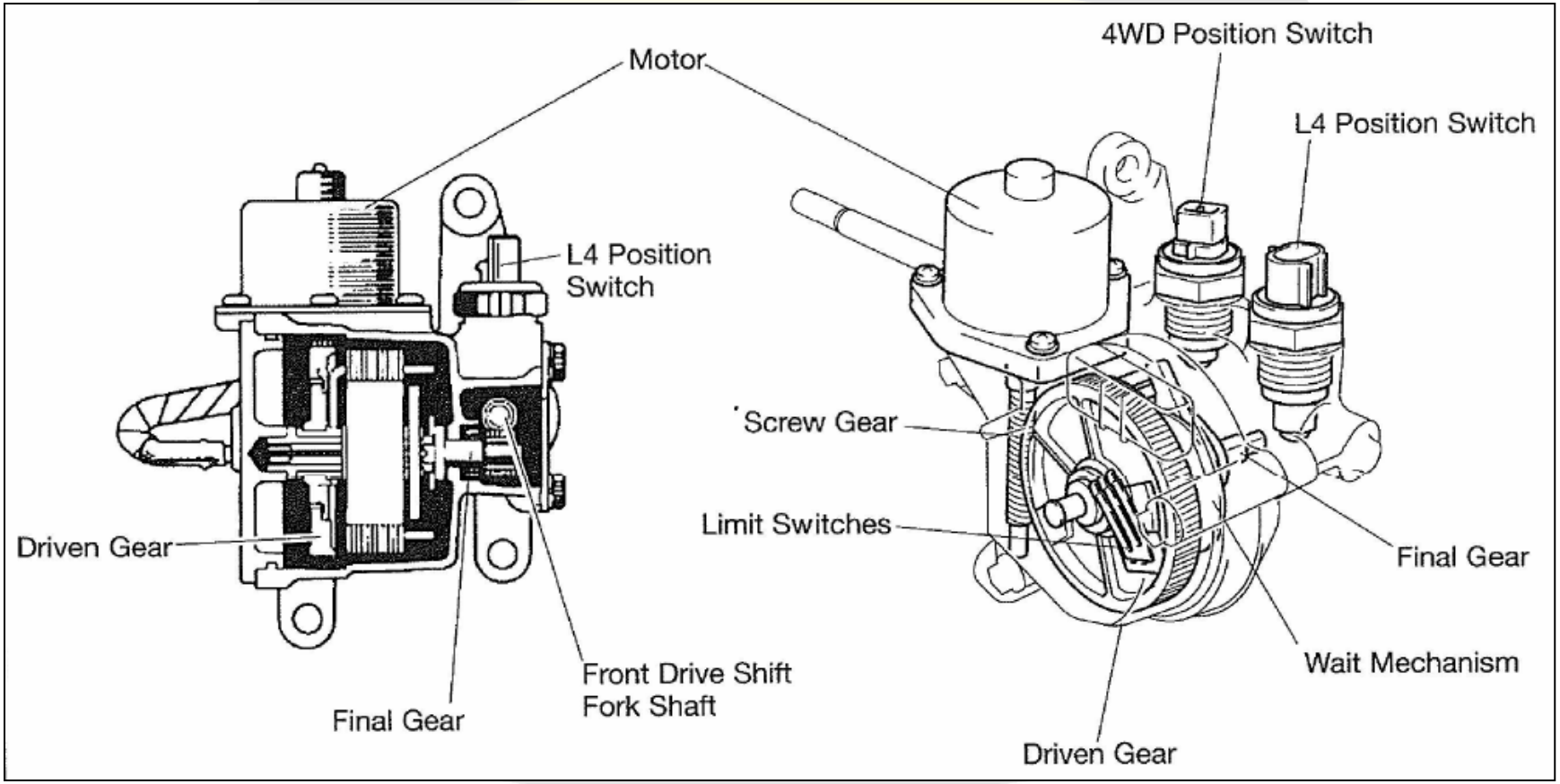

Typical Wire Diagram (A.D.D.)

The 4WD ECU monitors the A.D.D. actuator through the limit switch.

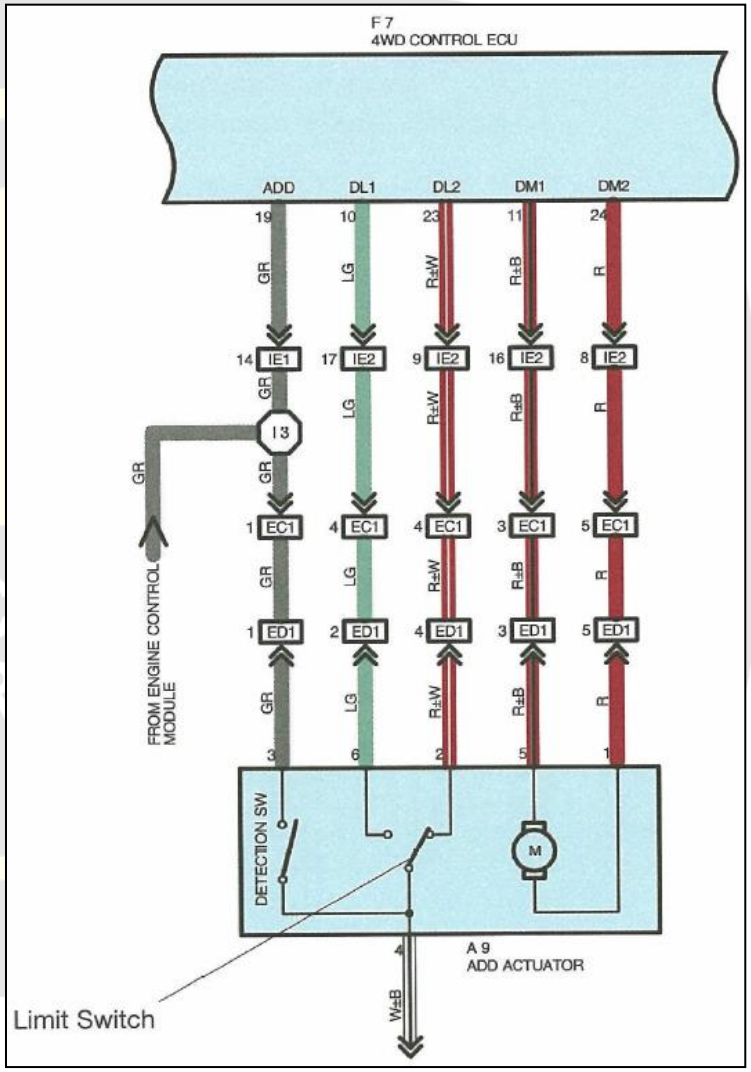

Vacuum Controlled A.D.D. Actuator

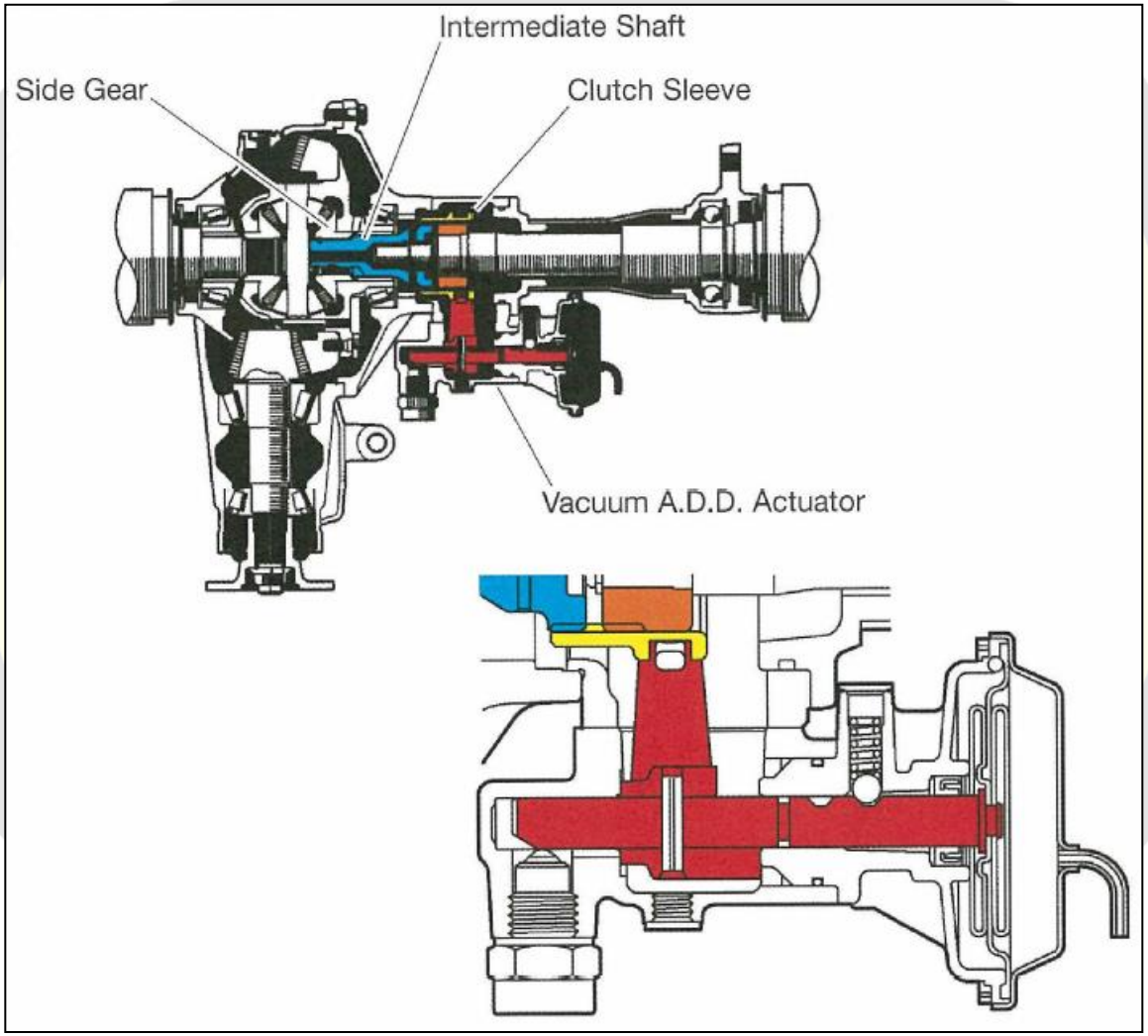

Vacuum Controlled A.D.D. Actuator

The Vacuum Control Differential System (VSV) is controlled by a two position A.D.D. relay operated by the 4WD ECU control unit.

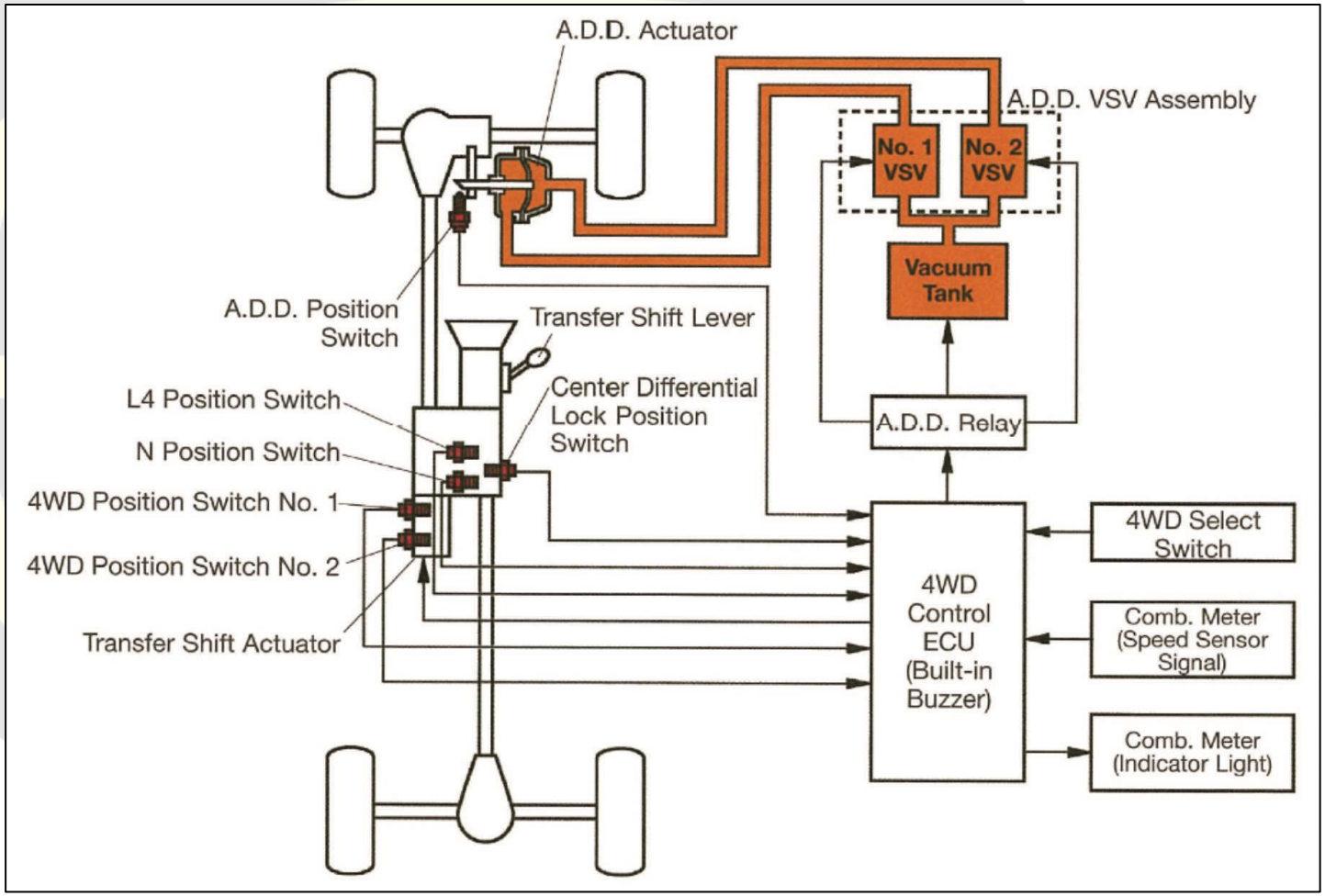

Rear Locking Differential

The rear locking differential system locks the differential providing equal torque to both rear wheels.

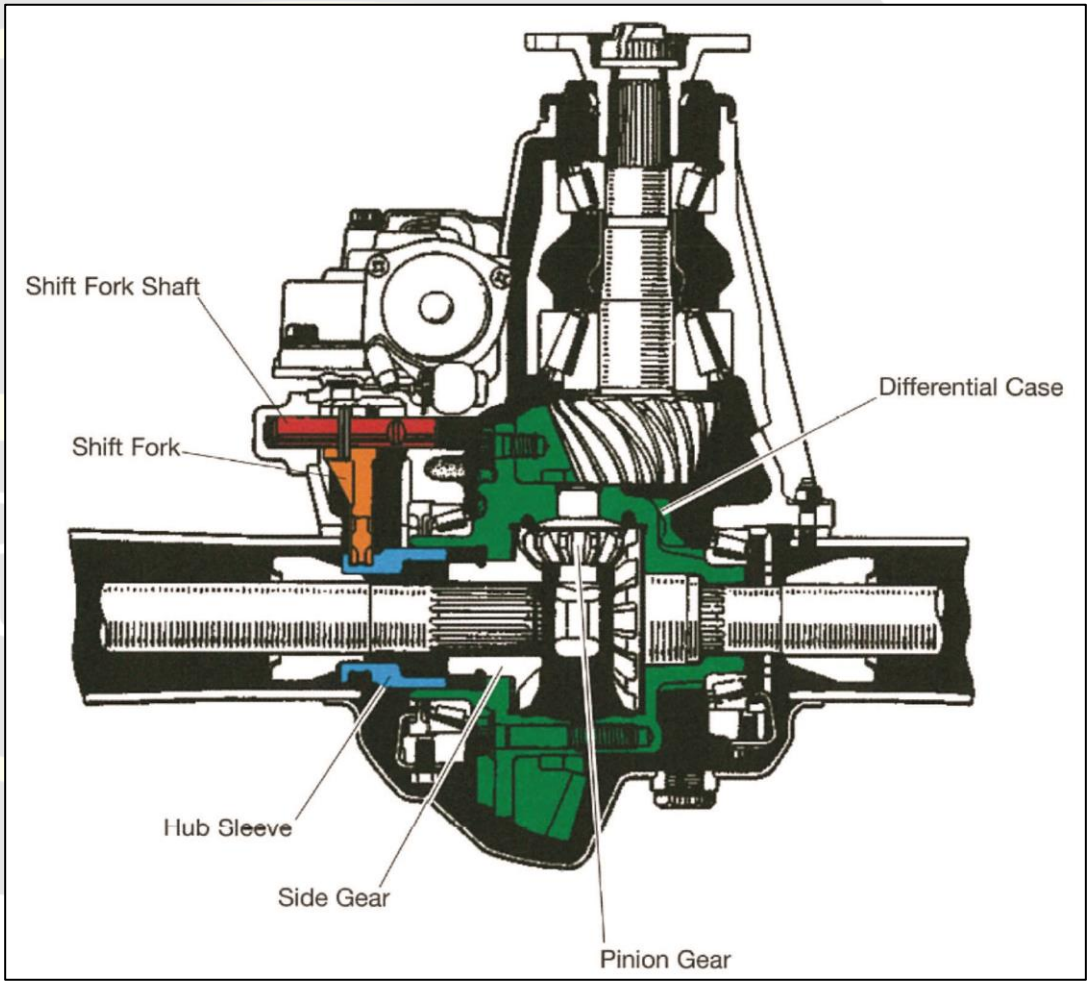

Rear Locking Differential

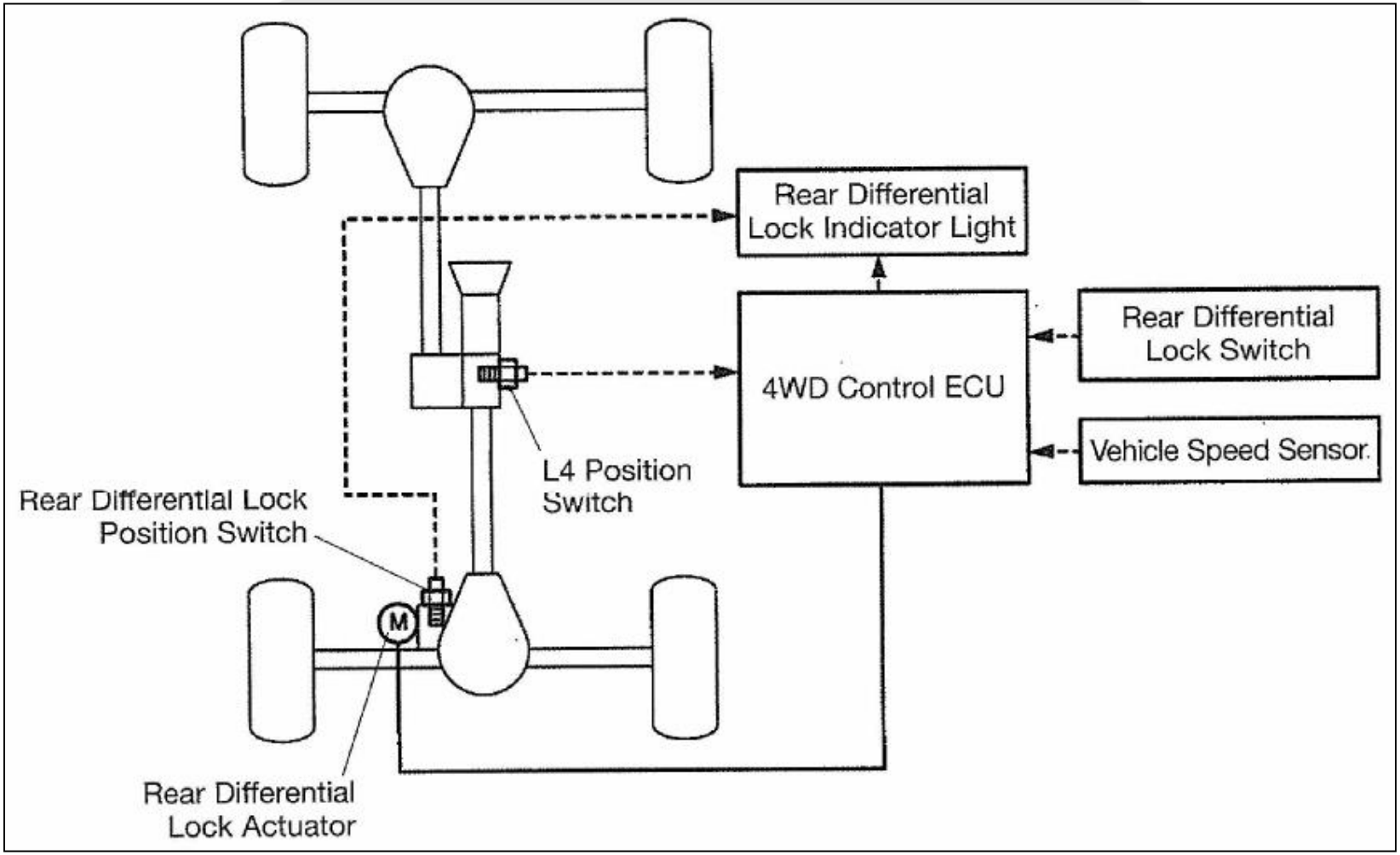

Rear Locking Differential

Rear Diff. Unlocked

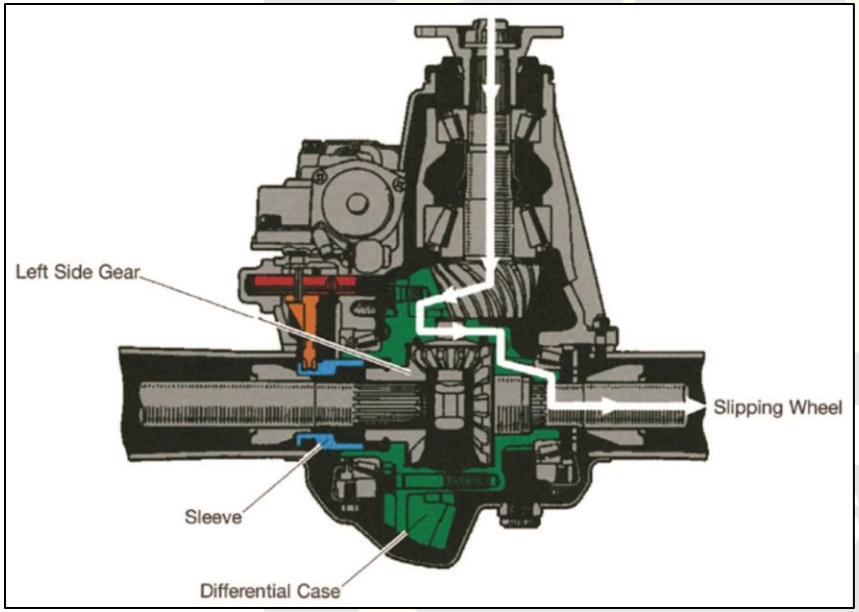

Rear Diff. Locked

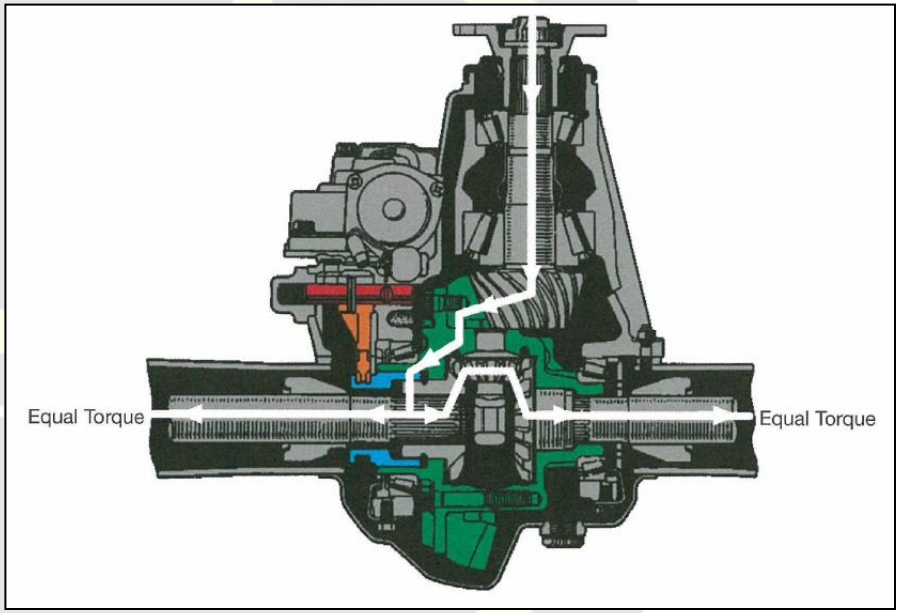

On Demand Type 4 Wheel Drive Systems

On Demand 4WD systems provide 4 wheel drive when necessary and in the amount that's needed. This system is initiated by driver input using a dash mounted switch. On front wheel drive vehicles like RAV4 the 4 wheel drive system is not used until needed.

The On Demand type system used in the Matrix utilized a Viscous Coupling (VSC) to provide 4WD when needed. The 2006 RAV 4 system eliminates the use of a viscous coupling and replaces it with a much faster acting system that produces less drag.

The 2006 Matrix is equipped with a viscous coupling that is part of the trans axle (not available for 2007). The RAV4 uses an electric coupling that is a part of the rear differential housing and gear set.

AWD systems rely on an Electronic Control Unit (ECU) to control wheel spin by applying the brakes to that wheel providing direct power to other wheels with traction.

On Demand Type 4 Wheel Drive Systems

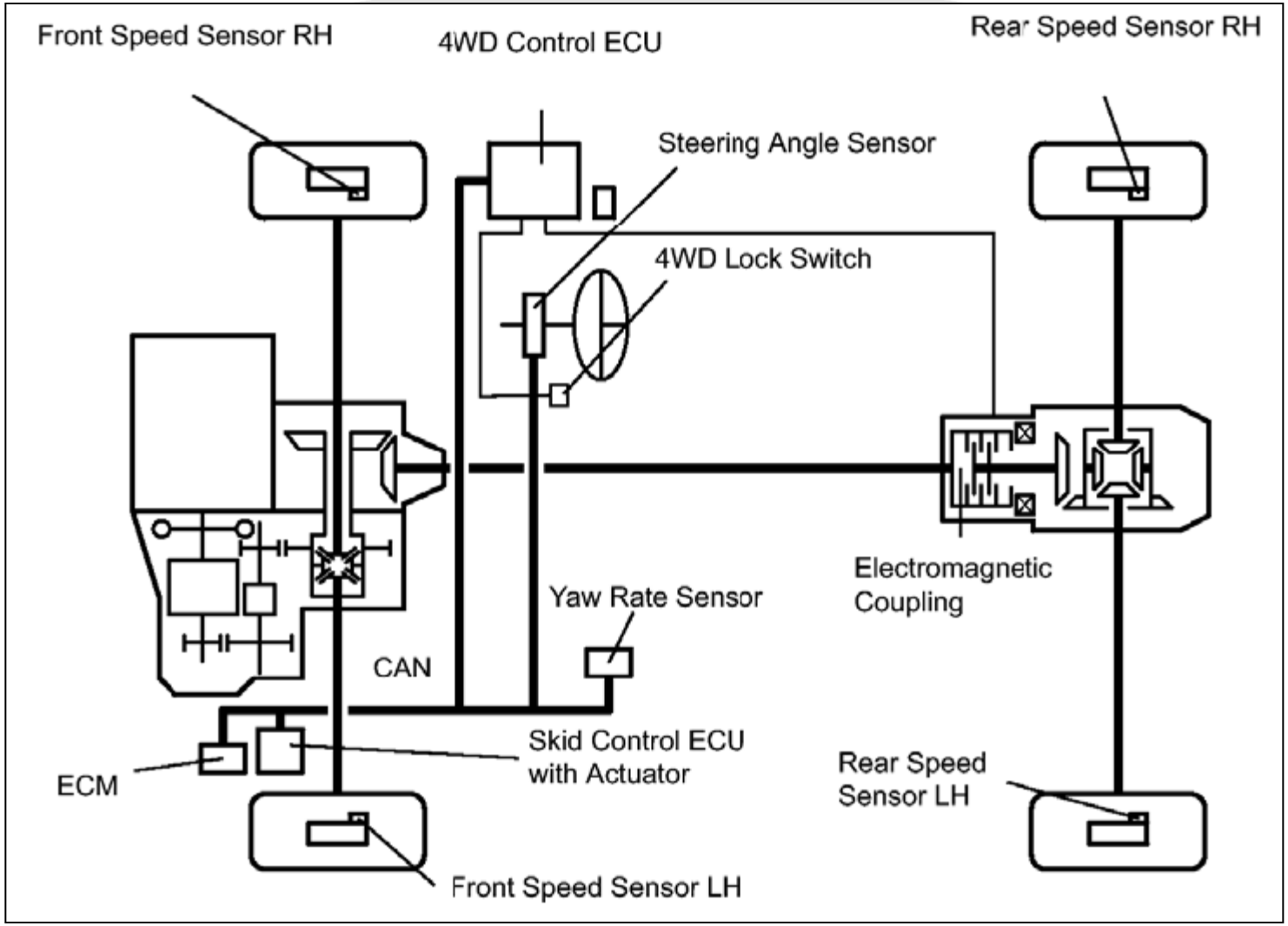

Electromagnetic Coupling

The outer section of the main clutch is attached to the front housing. The inner section of the main clutch is attached to the shaft.

The control clutch is attached to the control cam. The force of energy from the transfer is transferred from the drive shaft to the front housing.

When the linear solenoid is not active, the main and control clutch are not applied and no torque from the transfer is sent to the rear wheels.

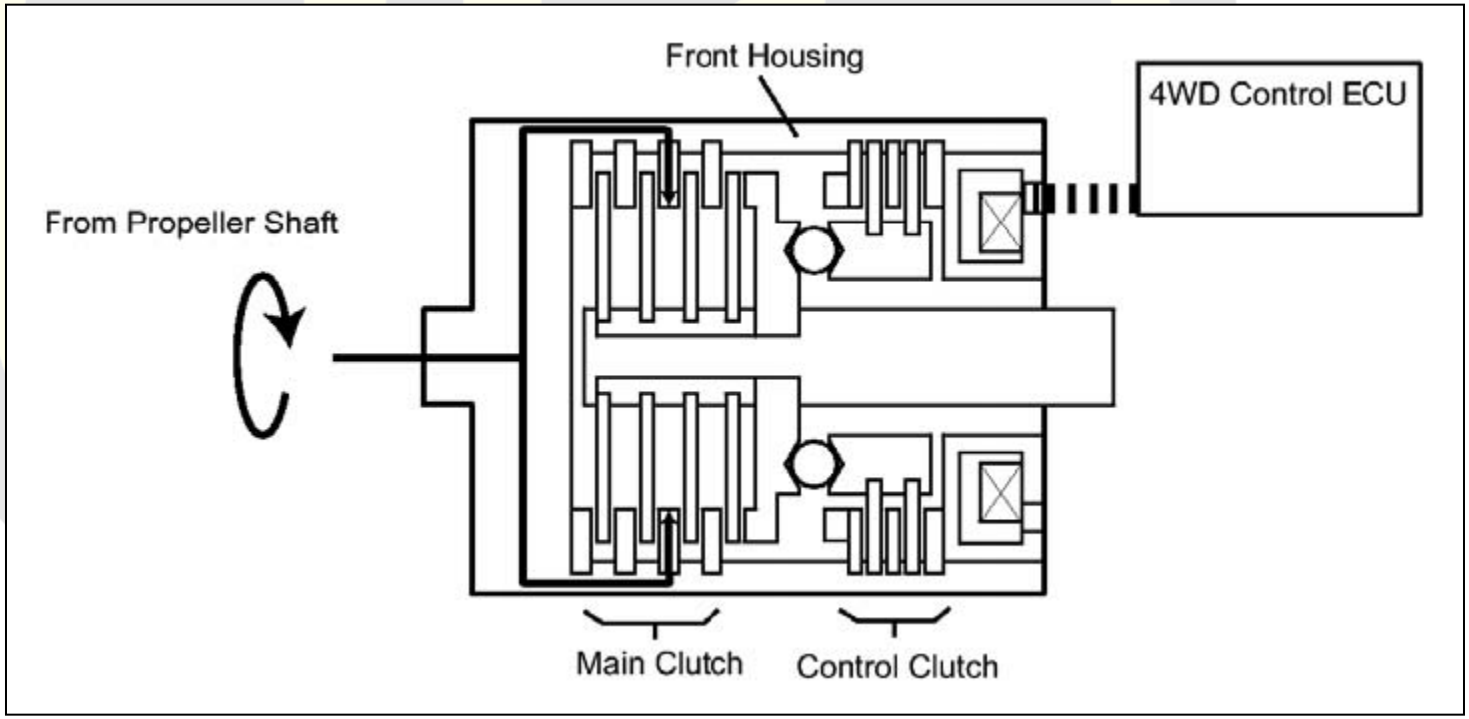

Electromagnetic Coupling

When the linear solenoid is energized it becomes magnetized and the electromagnetic force will pull the armature to attach to the control clutch side.

If there is a difference in rotation speed between the front and rear wheels and the control clutch is applied.

A rotation difference occurs between the main cam attached to the shaft and the control cam attached to the front housing.

This will result in the ball pushing its cam and the main clutch is applied.

The torque passes through the main clutch to the shaft and then to the rear differential and rear wheels

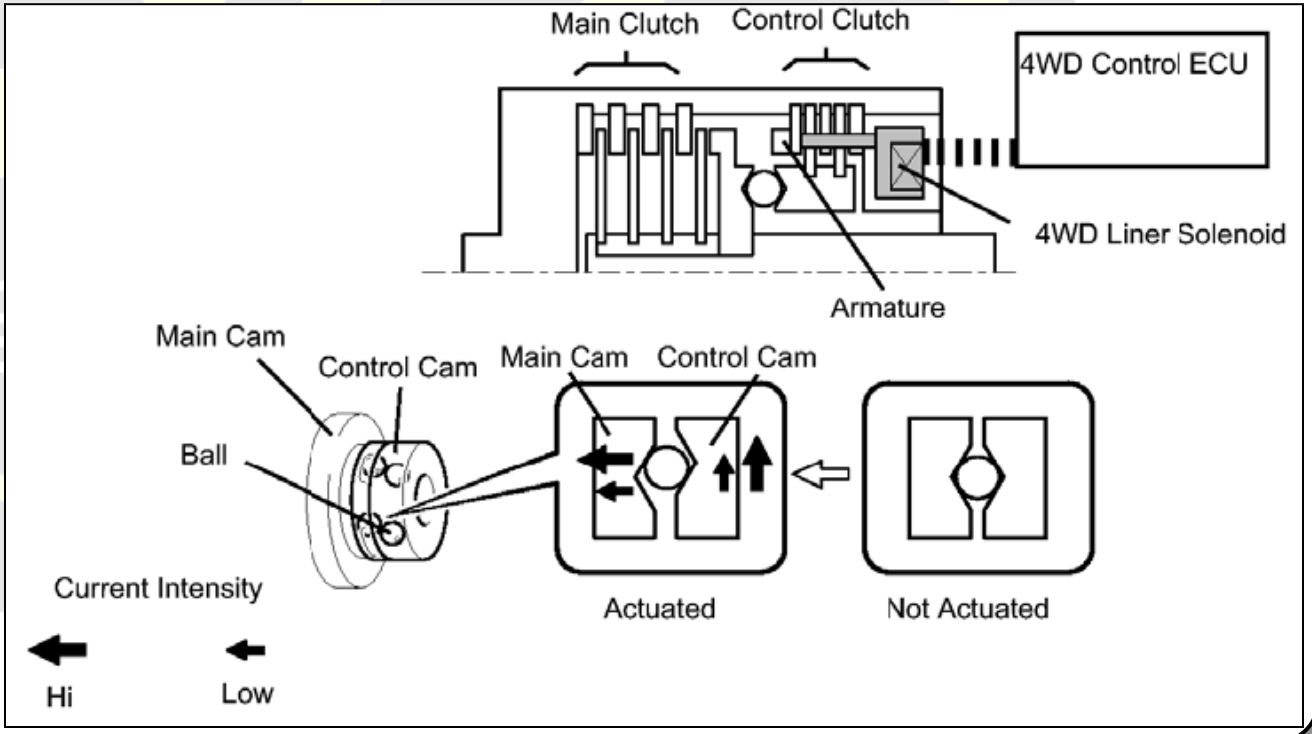

Electromagnetic Coupling

The amount of rotating difference between the front and rear wheels will determine how much the system controls the current to the linear solenoid.

The force of energy applied to the rear wheels will be gradually controlled.

The amount of current will determine how much force will be applied to main clutch.

As well the amount of torque that will be sent to the drive shaft until there is a direct link to the rear wheels in a 4WD condition.

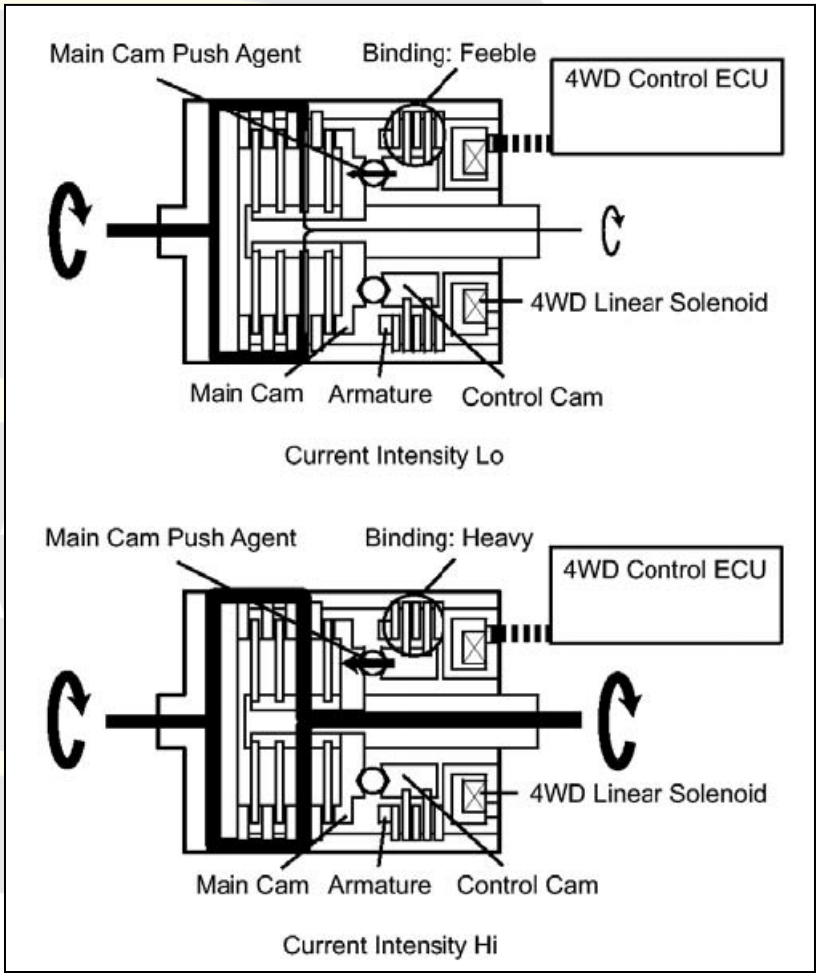

On Demand Type 4 Wheel Drive Systems

When engaged, a light in the instrument cluster indicates the system is in full maximum 4WD.

There is a torque split of 55% to the front drive and 45% to the rear drive. It will disconnect at speed above 25MPH or by using the brakes.

This system also Interfaces with the Electric Power Steering (EPS) and Vehicle Skid/Stability Control (VSC).

Hybrid type On Demand systems add a separate Electric Generator Drive (EGD) system to rear wheels without a driveshaft. This system operates the same way as a RAV4. The difference with this system is, it is activated by VSC/Traction Control System (TRAC) system instead of dash mounted switch.

This Hybrid system also interfaces with the Electronic Power Steering (EPS).

Today's Presentation Sponsored By:

SEAL AFTERMARKET™
PRODUCTS
your source for engineered solutions

Phone 954-364-2400 • Toll Free 800-582-2760 • Fax 954-364-2401
www.sealaftermarketproducts.com

TOLEDO TRANS-KIT

Any Questions?

Thank You For Attending